ELECTORAL ROLL 2026 S13 Maharashtra

No. Name and Reservation Status of Assembly Constituency : 241 - TULJAPUR (GEN)	Part No. : 27
No. Name and Reservation Status of Parliamentary Constituency(ies) in which the Assembly Constituency is located : 40 - OSMANABAD (GEN)	

1. Details of Revision

Year of Revision	2026
Qualifying Date	01-10-2026
Type of revision	Special Intensive Revision 2026
Date of Publication	31-08-2026

Roll Identification

Draft Electoral Roll prepared under Special Intensive Revision - 2026

2. Details of part and polling area

No. and name of sections in the part

1-Juni Grampanchayat OfficeTer
2-Sathe Nagar Ter

Main Town or Village	: TER
Police Station	: DHOKI
Taluka	: DHARASHIV
District	: OSMANABAD
Pin code	: 413509

3. Polling Station Details

No. and Name of Polling Station :	Type of Polling Station (Male/Female/General)	General
27 - Ter **Address of Polling Station :** Zilla Parishad Girls School, Central Side Room No. 1, Ter	Number of Auxiliary Polling Stations in this part :	0

4. NUMBER OF ELECTORS

Starting Serial No.	Ending Serial No.	Net Electors			
		Male	Female	Third Gender	Total
1	899	458	441	0	899

Issued by Electoral Registration Office

Nazri Naksha

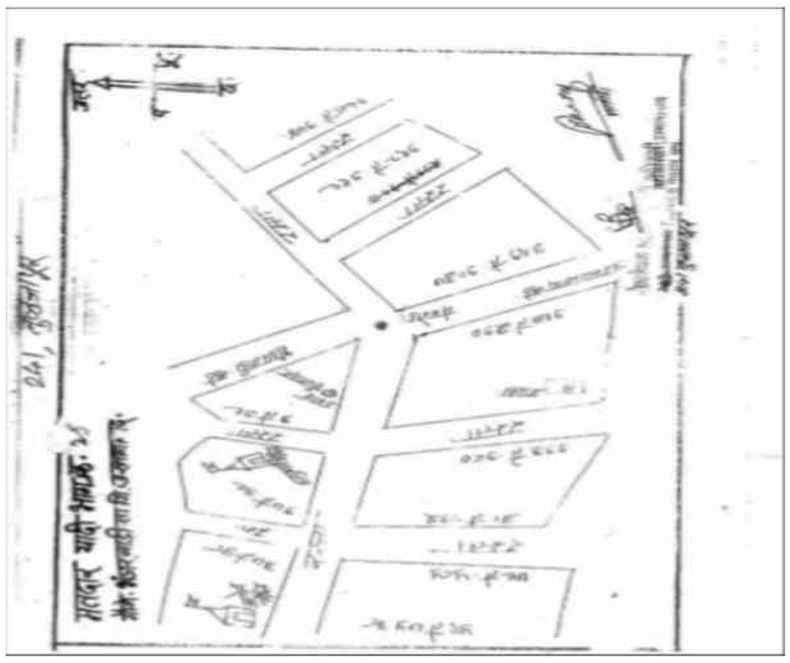

Google Map View

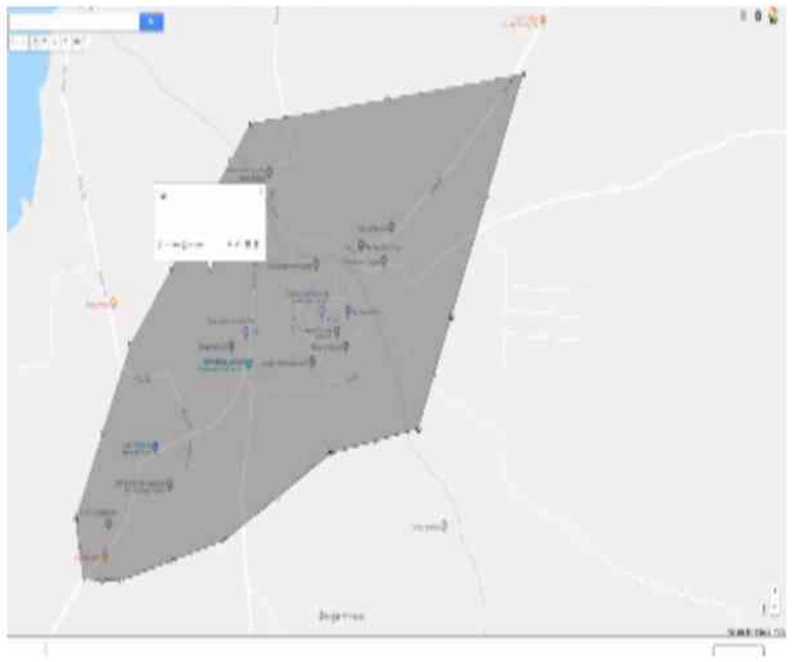

Polling Station Building Front View



Polling Station Front View

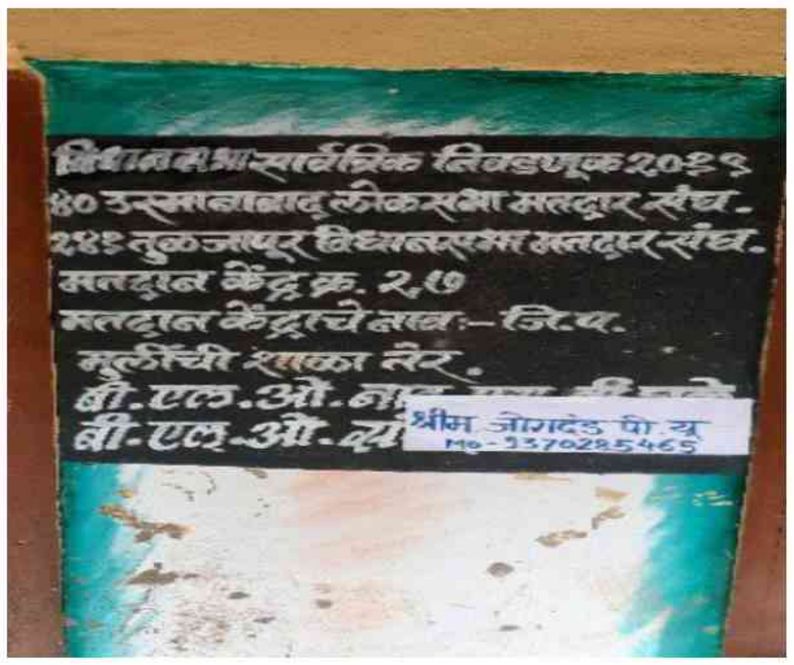

Cad View

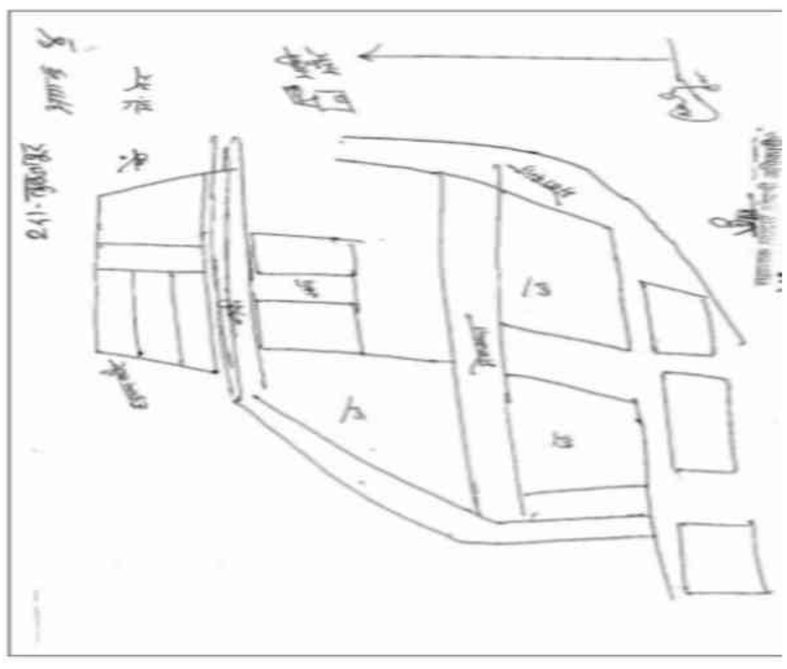

Key MAP View

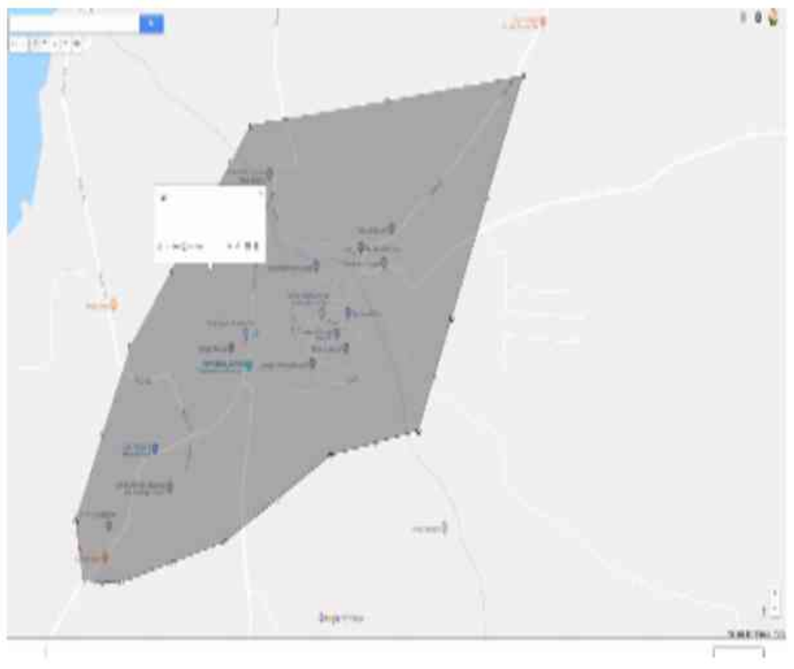

1 NXV8406720
Name : VARSHA PADMAKAR ABDARE
Husband's Name: PADMAKAR ABDARE
House Number :
Age : 32 Gender : Female
Photo Available

2 NXV5133475
Name : SHRUTI GOPALSINGH CHOUHAN
Husband's Name: GOPALSINGH Chouhan
House Number : Near old Grampanchayat
Age : 26 Gender : Female
Photo Available

3 NXV8407363
Name : AVINASH BIBHISHAN ANDHALE
Father's Name: BIBHISHAN ANDHALE
House Number :
Age : 31 Gender : Male
Photo Available

4 NXV8407470
Name : ATISH BIBHISHAN ANDHALE
Father's Name: BIBHISHAN ANDHALE
House Number :
Age : 28 Gender : Male
Photo Available

5 NXV8407017
Name : Bagwan Abudaud Salam
Father's Name: SALAM BAGAVAN
House Number :
Age : 28 Gender : Male
Photo Available

6 NXV8406746
Name : SARIKA UMESH BAN
Mother's Name: UMESH BAN
House Number :
Age : 28 Gender : Female
Photo Available

7 NXV8407405
Name : Shashikant SITARAM BANDAGAR
Father's Name: SITARAM BANDAGAR
House Number :
Age : 33 Gender : Male
Photo Available

8 NXV8407397
Name : KRUSHANA SITARAM BANDAGAR
Father's Name: SITARAM BANDAGAR
House Number :
Age : 30 Gender : Male
Photo Available

9 NXV8406753
Name : BHAGYASHREE BALAJI BHAKTE
Father's Name: BALAJI BHAKTE
House Number :
Age : 39 Gender : Female
Photo Available

10 NXV7898679
Name : KRISHNA MARUTI BHIMGE
Father's Name: MARUTI bhige
House Number :
Age : 31 Gender : Male
Photo Available

11 NXV8406886
Name : ASHVINI BALASAHEB BOURAGI
Father's Name: BALASAHEB BOURAGI
House Number :
Age : 28 Gender : Female
Photo Available

12 NXV8407124
Name : AKASHAY ANGADSINH CAHNDELE
Father's Name: ANGADSINH CAHNDELE
House Number :
Age : 28 Gender : Male
Photo Available

13 NXV8406977
Name : AMOL ARUN CHIKARUSKAR
Father's Name: ARUN CHIKARUSKAR
House Number :
Age : 28 Gender : Male
Photo Available

14 NXV8406738
Name : TEJASWINI SANTOSH DAK
Husband's Name: SANTOSH DAK
House Number : NEAR NEW BUS STAND
Age : 39 Gender : Female
Photo Available

15 NXV8407025
Name : PRADIP SHAHAJI DAK
Father's Name: SHAHAJI DAK
House Number :
Age : 30 Gender : Male
Photo Available

16 NXV8407181
Name : SANDIP SHAHAJI DAK
Father's Name: SHAHAJI DAK
House Number :
Age : 28 Gender : Male
Photo Available

17 NXV8065740
Name : Sangita Vikas Devkar
Husband's Name: Vikas Devkar
House Number :
Age : 34 Gender : Female
Photo Available

18 NXV5057443
Name : ARABAJ MULANI
Father's Name: HAKIM MULANI
House Number : 0
Age : 21 Gender : Male
Photo Available

19 NXV8065765
Name : Sujatbi Najir Fakir
Husband's Name: Najir Fakir
House Number :
Age : 76 Gender : Female
Photo Available

20 NXV8407512
Name : CHANDANI SUNIL GAYKAWAD
Husband's Name: SUNIL GAYKAWAD
House Number :
Age : 35 Gender : Female
Photo Available

21 NXV8407207
Name : MARUTI KISAN INGALE
Father's Name: KISAN INGALE
House Number :
Age : 76 Gender : Male
Photo Available

22 NXV7898729
Name : parvati sudarshan kachre
Husband's Name: sudarshan kachre
House Number :
Age : 34 Gender : Female
Photo Available

23 NXV8407678
Name : MAYURI DHANU KADAM
Husband's Name: DHANU KADAM
House Number :
Age : 38 Gender : Female
Photo Available

24 NXV8407462
Name : ANNASAHEB RAGHUNATH KADAM
Father's Name: RAGHUNATH KADAM
House Number :
Age : 28 Gender : Male
Photo Available

25 NXV8407223
Name : ASHOK BICHAVA KALE
Father's Name: BICHAVA KALE
House Number :
Age : 53 Gender : Male
Photo Available

26 NXV8406951
Name : NAMADEV BHUJANG KALE
Father's Name: BHUJANG KALE
House Number :
Age : 36 Gender : Male
Photo Available

27 NXV8407082
Name : JITENDR BHIMA KALE
Father's Name: BHIMA KALE
House Number :
Age : 33 Gender : Male
Photo Available

28 NXV8407215
Name : JAGU BHUJANG KALE
Father's Name: BHUJANG KALE
House Number :
Age : 32 Gender : Male
Photo Available

29 NXV8407264
Name : NANA SHANKAR KALE
Father's Name: SHANKAR KALE
House Number :
Age : 31 Gender : Male
Photo Available

30 NXV8406878
Name : JAYSHRI SATISH KALE
Husband's Name: SATISH KALE
House Number :
Age : 31 Gender : Female
Photo Available

31 NXV8406902 Name : KAVITA NANA KALE Husband's Name: NANA KALE House Number : Age : 30 Gender : Female Photo Available	32 NXV8406910 Name : KAVITABAI DATTA KALE Husband's Name: DATTA KALE House Number : Age : 28 Gender : Female Photo Available	33 NXV8406969 Name : TANAJI SHAHAJI KALE Father's Name: SHAHAJI KALE House Number : Age : 29 Gender : Male Photo Available
34 NXV8406795 Name : BALIBAI JITENDRA KALE Father's Name: JITENDRA KALE House Number : Age : 28 Gender : Female Photo Available	35 NXV8406860 Name : JYOTI SATISH KALE Husband's Name: SATISH KALE House Number : Age : 28 Gender : Female Photo Available	36 NXV8407140 Name : LOKESH APPA KALE Father's Name: APPA KALE House Number : Age : 28 Gender : Male Photo Available
37 NXV7898711 Name : roshni sachin karnavar Father's Name: sachin karnavar House Number : Age : 31 Gender : Female Photo Available	38 NXV8407579 Name : UJJAWALA NAMDEV KASBE Husband's Name: NAMDEV KASBE House Number : Age : 28 Gender : Female Photo Available	39 NXV7898695 Name : ANNA SOMNATH KASHID Father's Name: SOMNATH KASHID House Number : Age : 31 Gender : Male Photo Available
40 NXV8407231 Name : AMOL DHODIRAM KASTURE Father's Name: DHODIRAM KASTURE House Number : Age : 30 Gender : Male Photo Available	41 NXV8406845 Name : MANISHA AMOL KASTURE Husband's Name: AMOL KASTURE House Number : Age : 28 Gender : Female Photo Available	42 NXV8406761 Name : SHAHIN KAHLAKH KAZI Husband's Name: AKHALAK AHEMAD KAZI House Number : Age : 28 Gender : Female Photo Available
43 NXV7898687 Name : randhir dattu khating Father's Name: dattu khating House Number : Age : 31 Gender : Male Photo Available	44 NXV8407652 Name : RADHABAI BABAN KOKARE Husband's Name: BABAN KOKARE House Number : Age : 39 Gender : Female Photo Available	45 NXV5132386 Name : SHRINIVAS SURESH HEGADAKAR Father's Name: HEGADAKAR SURESH House Number : 53 Age : 21 Gender : Male Photo Available
46 NXV8407488 Name : MAHADEV SAMBHAJI KOKARE Father's Name: SAMBHAJI KOKARE House Number : Age : 30 Gender : Male Photo Available	47 NXV8406704 Name : KAVITA MANOJ KOKARE Husband's Name: MANOJ KOKARE House Number : Age : 28 Gender : Female Photo Available	48 NXV8407496 Name : BALIRAM SAMBHAJI KOKARE Father's Name: SAMBHAJI KOKARE House Number : Age : 28 Gender : Male Photo Available
49 NXV5061627 Name : SAIRAJ RAUT Father's Name: RAVINDRA RAUT House Number : Ter Age : 22 Gender : Male Photo Available	50 NXV8407504 Name : JANKI RAM KOLI Father's Name: RAM KOLI House Number : Age : 30 Gender : Female Photo Available	51 NXV5059068 Name : PRAJAKTA PAWAR Father's Name: BHASKAR PAWAR House Number : 0 Age : 22 Gender : Female Photo Available
52 NXV8406696 Name : RADHA UMAKANT KULHAVAT Husband's Name: UMAKANT KULHAVAT House Number : Age : 39 Gender : Female Photo Available	53 NXV8065708 Name : Ashwini Tanmaji Mane Husband's Name: Tanmaji Mane House Number : Age : 32 Gender : Female Photo Available	54 NXV8407413 Name : ASAD GANI MANIYAR Father's Name: GANI MANIYAR House Number : Age : 36 Gender : Male Photo Available
55 NXV8407553 Name : SANJIVANI ISHWAR MASAL Husband's Name: ISHWAR MASAL House Number : Age : 28 Gender : Female Photo Available	56 NXV8407645 Name : SHAHISTA SHAKIL MULANI Father's Name: SHAKIL MULANI House Number : Age : 38 Gender : Female Photo Available	57 NXV8065690 Name : Dattatrya Khandu Padule Father's Name: Khandu Padule House Number : Age : 33 Gender : Male Photo Available
58 NXV8407538 Name : REKHA BABAN PANCHAL Husband's Name: BABAN PANCHAL House Number : Age : 38 Gender : Female Photo Available	59 NXV8406894 Name : URMILA RAJESH PANCHALH Husband's Name: RAJESH PANACHALH House Number : Age : 29 Gender : Female Photo Available	60 NXV8407314 Name : TUKARAM HARIBHAU PANDHARE Father's Name: HARIBHAU PANDHARE House Number : Age : 29 Gender : Male Photo Available

61 NXV8407454
Name : DNYANESHWAR HARI PANDHARE
Father's Name: HARI PANDHARE
House Number :
Age : 27 Gender : Male
Photo Available

62 NXV8406928
Name : JAMUNABAI LAHU PAWAR
Husband's Name: LAHU PAWAR
House Number :
Age : 40 Gender : Female
Photo Available

63 NXV8406829
Name : UKABAI ACHYUT PAWAR
Husband's Name: ACHYUT PAWAR
House Number :
Age : 40 Gender : Female
Photo Available

64 NXV8407272
Name : LAHU MOHAN PAWAR
Father's Name: MOHAN PAWAR
House Number :
Age : 35 Gender : Male
Photo Available

65 NXV8407041
Name : KANTU KALIDAS PAWAR
Father's Name: KALIDAS PAWAR
House Number :
Age : 32 Gender : Male
Photo Available

66 NXV8407249
Name : VISHAL SOMNATH PAWAR
Father's Name: SOMNATH PAWAR
House Number :
Age : 30 Gender : Male
Photo Available

67 NXV8407132
Name : SHANKAR RAM PAWAR
Father's Name: RAM PAWAR
House Number :
Age : 28 Gender : Male
Photo Available

68 NXV8407009
Name : BAPU DEVARAO PAWAR
Father's Name: DEVARAO PAWAR
House Number :
Age : 28 Gender : Male
Photo Available

69 NXV5061148
Name : MANSI BHORE
Father's Name: SUJIT BHORE
House Number : 0
Age : 22 Gender : Female
Photo Available

70 NXV8407199
Name : ACHYUT PRABHU PAWAR
Father's Name: PRABHU PAWAR
House Number :
Age : 28 Gender : Male
Photo Available

71 NXV8406944
Name : GANESH RAMESH PAWAR
Father's Name: RAMESH PAWAR
House Number :
Age : 27 Gender : Male
Photo Available

72 NXV7898737
Name : ANIRTA BAPPA PETHE
Husband's Name: BAPPA PETHE
House Number :
Age : 31 Gender : Female
Photo Available

73 NXV8407587
Name : SULATANA SULEMAN PHAKIR
Husband's Name: SULEMAN FAKIR
House Number :
Age : 36 Gender : Female
Photo Available

74 NXV8406654
Name : RADHA KHANDU PIPALHE
Husband's Name: KHANDU PIPALHE
House Number :
Age : 48 Gender : Female
Photo Available

75 NXV8065716
Name : Bhagyashri Anant Sakhre
Husband's Name: Anant Sakhre
House Number :
Age : 41 Gender : Female
Photo Available

76 NXV8407355
Name : Shashir Dhananjay Saraf
Father's Name: DHANJAY SARAF
House Number :
Age : 31 Gender : Male
Photo Available

77 NXV8406688
Name : RABIYA ABBAS SHAIKH
Husband's Name: ABBAS SHAIKH
House Number :
Age : 40 Gender : Female
Photo Available

78 NXV8407330
Name : SAMADHAN GURULING SHIRAL
Father's Name: GURULING SHIRAL
House Number :
Age : 30 Gender : Male
Photo Available

79 NXV8407348
Name : SIDDHESHWAR MAHADEV SHIRAL
Father's Name: MAHADEV SHIRAL
House Number :
Age : 28 Gender : Male
Photo Available

80 NXV8407629
Name : GITA SATISH THOMBARE
Husband's Name: SATISH THOMBARE
House Number :
Age : 50 Gender : Female
Photo Available

81 NXV8407611
Name : LATA DATTU THOMBARE
Husband's Name: DATTU THOMBARE
House Number :
Age : 30 Gender : Female
Photo Available

82 NXV8407637
Name : TEJASHRI PRASAD VYAS
Husband's Name: PRASAD VYAS
House Number :
Age : 36 Gender : Female
Photo Available

83 NXV8407447
Name : SUDHANVA SUNIL VYAS
Father's Name: SUNIL VYAS
House Number :
Age : 29 Gender : Male
Photo Available

84 NXV8406712
Name : SONALI BALIRAM YADAV
Husband's Name: BALIRAM YADAV
House Number :
Age : 33 Gender : Female
Photo Available

85 NXV9365560
Name : Archana Tanaji Pawar
Husband's Name: TANAJI PAVAR
House Number : -
Age : 36 Gender : Female
Photo Available

86 NXV4789962
Name : Bhonde Sonali Krushanaa
Husband's Name: Bhonde Krushana
House Number : -
Age : 27 Gender : Female
Photo Available

87 NXV9319443
Name : Sarfaraj Baba Sayyad
Father's Name: Baba Sayyad
House Number : -
Age : 25 Gender : Male
Photo Available

88 NXV9410416
Name : Amar Ganesh Panchal
Father's Name: GANESH PANCHAL
House Number : -
Age : 25 Gender : Male
Photo Available

89 NXV9317975
Name : RAM PRAKASH AANDHALE
Father's Name: PRAKASH AANDHALE
House Number : -
Age : 29 Gender : Male
Photo Available

90 NXV9317967
Name : SHAM PRAKASH AANDHALE
Father's Name: PRAKASH AANDHALE
House Number : -
Age : 28 Gender : Male
Photo Available

91 NXV9381229
Name : ABHISHEK ANKUSHE
Father's Name: BALAJI ANKUSHE
House Number : -
Age : 26 Gender : Male
Photo Available

92 NXV9382409
Name : ARATI BANDE
Husband's Name: MAHADEV BANDE
House Number : -
Age : 30 Gender : Female
Photo Available

93 NXV9411778
Name : Pravin nana Bande
Father's Name: Nana Bande
House Number : -
Age : 26 Gender : Male
Photo Available

94 NXV9317918
Name : DATTA BABURAO BHAKTE
Father's Name: BABURAO BHAKTE
House Number : -
Age : 41 Gender : Male
Photo Available

95 NXV9318080
Name : JYOTI DATTA BHAKTE
Husband's Name: DATTA BHAKTE
House Number : -
Age : 36 Gender : Female
Photo Available

96 NXV9319757
Name : SHITAL BALAJI BHAKTE
Husband's Name: BALAJI BHAKTE
House Number : -
Age : 31 Gender : Female
Photo Available

97 NXV9318882
Name : JYOTI RAVIKANT DESHMUKH
Husband's Name: RAVIKANT DESHMUKH
House Number : -
Age : 30 Gender : Female
Photo Available

98 NXV9411802
Name : GANESH DEVKATE
Father's Name: LAXMAN DEVKATE
House Number : -
Age : 26 Gender : Male
Photo Available

99 NXV9412032
Name : ABHIJEET DHUMAL
Father's Name: BALAJI DHUMAL
House Number : -
Age : 26 Gender : Male
Photo Available

100 NXV9318783
Name : DHANASHRI SOPAN KANADE
Husband's Name: SOPAN KANADE
House Number : -
Age : 32 Gender : Female
Photo Available

101 NXV9382359
Name : SHARMILA KANADE
Husband's Name: BALAJI KANADE
House Number : -
Age : 33 Gender : Female
Photo Available

102 NXV9379199
Name : LATA KARANAVAR
Husband's Name: RAM KARNAVAR
House Number : -
Age : 32 Gender : Female
Photo Available

103 NXV9379157
Name : RAM KARNAVAR
Father's Name: BABAN KARNAVAR
House Number : -
Age : 32 Gender : Male
Photo Available

104 NXV9383803
Name : mayur karnavar
Husband's Name: bapu karnavar
House Number : -
Age : 30 Gender : Female
Photo Available

105 NXV9412065
Name : DATTATRAY KARNAVAR
Father's Name: SHESHERAO KARNAVAR
House Number : -
Age : 28 Gender : Male
Photo Available

106 NXV9311325
Name : ASHWINI ANNA KASHID
Husband's Name: ANNA KASHID
House Number : -
Age : 26 Gender : Female
Photo Available

107 NXV9411877
Name : SOMNATH KHANDAGALE
Father's Name: HARI KHANDAGALE
House Number : -
Age : 29 Gender : Male
Photo Available

108 NXV9311333
Name : RUPALI SIDDHESHWAR KHANDEKAR
Husband's Name: SIDDHESHWAR KHANDEKAR
House Number : -
Age : 31 Gender : Female
Photo Available

109 NXV9411497
Name : ABHISHEK KHANDEKAR
Father's Name: BHUJANG KHANDEKAR
House Number : -
Age : 26 Gender : Male
Photo Available

110 NXV9383779
Name : radha khote
Husband's Name: datta khote
House Number : -
Age : 35 Gender : Female
Photo Available

111 NXV9412040
Name : AMAR KKARNAVAR
Father's Name: SHESHERAO KARNAVAR
House Number : -
Age : 33 Gender : Male
Photo Available

112 NXV9311317
Name : SONALI KHANDU KOLEKAR
Husband's Name: KHANDU KOLEKAR
House Number : -
Age : 31 Gender : Female
Photo Available

113 NXV9318007
Name : RAVIKANT BHAGWAT KOLI
Father's Name: BHAGWAT KOLI
House Number : -
Age : 38 Gender : Male
Photo Available

114 NXV9318866
Name : BHAGYASHRI SUBHASH KOLI
Husband's Name: SUBHASH KOLI
House Number : -
Age : 34 Gender : Female
Photo Available

115 NXV9379629
Name : AISHWARYA KOLI
Father's Name: RAHUL KOLI
House Number : -
Age : 31 Gender : Female
Photo Available

116 NXV9411851
Name : ASHWINI LAKAPATE
Husband's Name: SANTOSH LAKAPATE
House Number : -
Age : 37 Gender : Female
Photo Available

117 NXV9411547
Name : SHREYA LAMTURE
Father's Name: VITTHAL LAMTURE
House Number : -
Age : 27 Gender : Female
Photo Available

118 NXV9365586
Name : KAVITA MALI
Husband's Name: MAHADEV MALI
House Number : -
Age : 41 Gender : Female
Photo Available

119 NXV9318833
Name : AAKASH VASANT MANE
Father's Name: VASANT MANE
House Number : -
Age : 34 Gender : Male
Photo Available

120 NXV9318841
Name : JAYASHRI AAKASH MANE
Husband's Name: AAKASH MANE
House Number : -
Age : 31 Gender : Female
Photo Available

121 NXV5064597
Name : ROHAN KOLI
Mother's Name: ANITA KOLI
House Number : At post ter
Age : 22 Gender : Male
Photo Available

122 NXV9411505
Name : ASMITA MORE
Father's Name: RAMAKANT MORE
House Number : -
Age : 34 Gender : Female
Photo Available

123 NXV9383159
Name : ANIKET NAIKWADI
Father's Name: BABAN NAIKWADI
House Number : -
Age : 29 Gender : Male
Photo Available

124 NXV9318015
Name : KAKA BHARAT NAIKWADI
Father's Name: BHARAT NAIKWADI
House Number : -
Age : 28 Gender : Male
Photo Available

125 NXV9311309
Name : NARAYAN SAMBHAJI NARE
Father's Name: SAMBHAJI NARE
House Number : -
Age : 79 Gender : Male
Photo Available

126 NXV9311242
Name : KAKASAHEB NARAYAN NARE
Father's Name: NARAYAN NARE
House Number : -
Age : 44 Gender : Male
Photo Available

127 NXV9312117
Name : KAVITA KAKASAHEB NARE
Husband's Name: KAKASAHEB NARE
House Number : -
Age : 30 Gender : Female
Photo Available

128 NXV9311259
Name : akash BABASAHEB PADULE
Father's Name: BABASAHEB PADULE
House Number : -
Age : 29 Gender : Male
Photo Available

129 NXV9411554
Name : AKASH PANCHAL
Father's Name: RAJENDRA PANCHAL
House Number : -
Age : 26 Gender : Male
Photo Available

130 NXV9411794
Name : ASHA PAVAR
Husband's Name: BHAGVAT PAVAR
House Number : -
Age : 50 Gender : Female
Photo Available

131 NXV9411521
Name : SHALINI PAVAR
Husband's Name: BAPU PAVAR
House Number : -
Age : 33 Gender : Female
Photo Available

132 NXV9314022
Name : BALAJI SHAMRAO PAVAR
Father's Name: SHAMRAO PAVAR
House Number : -
Age : 29 Gender : Male
Photo Available

133 NXV9314030
Name : ROHIT ASHOK PAVAR
Father's Name: ASHOK PAVAR
House Number : -
Age : 27 Gender : Male
Photo Available

134 NXV9314048
Name : RAKESH PADMAKAR PAVAR
Father's Name: PADMAKAR PAVAR
House Number : -
Age : 27 Gender : Male
Photo Available

135 NXV9364613
Name : pallavi PAVAR
Husband's Name: SAMBHAJI PAVAR
House Number : -
Age : 27 Gender : Female
Photo Available

136 NXV9312562
Name : NIKHIL VILAS RASAL
Father's Name: VILAS RASAL
House Number : -
Age : 27 Gender : Male
Photo Available

137 NXV9411984
Name : DILIP RITAPURE
Father's Name: BABURAO RITAPURE
House Number : -
Age : 33 Gender : Male
Photo Available

138 NXV9411570
Name : RADHA SALGAR
Husband's Name: GUNVANT SALGAR
House Number : -
Age : 29 Gender : Female
Photo Available

139 NXV9311275
Name : DEEPAK ANIL SALUNKE
Father's Name: ANIL SALUNKE
House Number : -
Age : 31 Gender : Male
Photo Available

140 NXV9382433
Name : GITANJALI SALUNKE
Husband's Name: PRAVIN SALUNKE
House Number : -
Age : 31 Gender : Female
Photo Available

141 NXV9311283
Name : PRABHAKAR ANIL SALUNKE
Father's Name: ANIL SALUNKE
House Number : -
Age : 28 Gender : Male
Photo Available

142 NXV9312596
Name : USHA DHANANJAY SHINDE
Husband's Name: DHANANJAY SHINDE
House Number : -
Age : 32 Gender : Female
Photo Available

143 NXV9412016
Name : RAHUL SHINDE
Father's Name: GOPINATH SHINDE
House Number : -
Age : 26 Gender : Male
Photo Available

144 NXV9411661
Name : POOJA SHIRAL
Father's Name: VIRBHADRA SHIRAL
House Number : -
Age : 30 Gender : Female
Photo Available

145 NXV9411620
Name : AKSHAY SHIRAL
Father's Name: MAHADEV SHIRAL
House Number : -
Age : 29 Gender : Male
Photo Available

146 NXV9411679
Name : SUSHANT SHIRAL
Father's Name: VIRBHADRA SHIRAL
House Number : -
Age : 27 Gender : Male
Photo Available

147 NXV9411604
Name : VAISHNAVI SHIRAL
Father's Name: RAJENDRA SHIRAL
House Number : -
Age : 26 Gender : Female
Photo Available

148 NXV9411513
Name : MAHADEVI SHIRGIRE
Husband's Name: KHADU SHIRGIRE
House Number : -
Age : 35 Gender : Female
Photo Available

149 NXV9411588
Name : RANI SURVASE
Husband's Name: BALAJI SURVASE
House Number : -
Age : 37 Gender : Female
Photo Available

150 NXV9311291
Name : BALAJI MANIK SUTAR
Father's Name: MANIK SUTAR
House Number : -
Age : 40 Gender : Male
Photo Available

151 NXV9312588
Name : ARCHANA BALAJI SUTAR
Husband's Name: BALAJI SUTAR
House Number : -
Age : 38 Gender : Female
Photo Available

152 NXV9311267
Name : SHRINIVAS MANIK SUTAR
Father's Name: MANIK SUTAR
House Number : -
Age : 32 Gender : Male
Photo Available

153 NXV9317942
Name : AASHA KAKA TAKALE
Husband's Name: KAKA TAKALE
House Number : -
Age : 33 Gender : Female
Photo Available

154 NXV9317926
Name : KAKASAHEB BABURAO TAKALE
Father's Name: BABURAO TAKALE
House Number : -
Age : 33 Gender : Male
Photo Available

155 NXV9184565
Name : GOROBA DAGADU THODSARE
Father's Name: DAGADU THODSARE
House Number : -
Age : 33 Gender : Male
Photo Available

156 NXV9319732
Name : SANGITA SANTOSH THOMBRE
Husband's Name: SANTOSH THOMBRE
House Number : -
Age : 37 Gender : Female
Photo Available

157 NXV9412008
Name : BHAGYASHRE ZANJE
Husband's Name: RAHUL ZANJE
House Number : -
Age : 28 Gender : Female
Photo Available

158 NXV9384314
Name : SARITA BANDE
Father's Name: IRAPPA BANDE
House Number : --
Age : 28 Gender : Female
Photo Available

159 NXV9381484
Name : RANJANA KANADE
Husband's Name: TIRUPATI KANADE
House Number : --
Age : 28 Gender : Female
Photo Available

160 NXV9383399
Name : KAVITA KOKARE
Father's Name: AVINASH KOKARE
House Number : --
Age : 29 Gender : Female
Photo Available

161 NXV9383423
Name : ANKITA LAMTURE
Father's Name: AANAND LAMTURE
House Number : --
Age : 28 Gender : Female
Photo Available

162 NXV9383415
Name : ABHISHEK LAMTURE
Father's Name: AANAND LAMTURE
House Number : --
Age : 26 Gender : Male
Photo Available

163 NXV9383407
Name : SHIVABAI NARE
Husband's Name: MAHADEV NARE
House Number : --
Age : 83 Gender : Female
Photo Available

164 NXV9381468
Name : VITTHAL NARE
Father's Name: MAHADEV NARE
House Number : --
Age : 44 Gender : Male
Photo Available

165 NXV9384405
Name : ROHINI NARE
Husband's Name: VITTHAL NARE
House Number : --
Age : 41 Gender : Female
Photo Available

166 NXV9383555
Name : ASHVIANI PANDHARE
Husband's Name: SACHIN PANDHARE
House Number : --
Age : 27 Gender : Female
Photo Available

167 NXV9383373
Name : NISHA RASAL
Father's Name: VILAS RASAL
House Number : --
Age : 29 Gender : Female
Photo Available

168 NXV9383365
Name : NIKITA THORAT
Father's Name: BALAJI THORAT
House Number : --
Age : 29 Gender : Female
Photo Available

169 NXV9984147
Name : SANJIVANI KHANDEKAR
Husband's Name: ASHOK KHANDEKAR
House Number : .
Age : 25 Gender : Female
Photo Available

170 NXV9984162
Name : HARI PETHE
Father's Name: BHAGWAN PETHE
House Number : .
Age : 35 Gender : Male
Photo Available

171 NXV9987132
Name : SHITAL PETHE
Husband's Name: HARI PETHE
House Number : .
Age : 33 Gender : Female
Photo Available

172 NXV4721502
Name : kishor ambad
Father's Name: pandurang ambad
House Number : 0
Age : 24 Gender : Male
Photo Available

173 NXV4720926
Name : SWATI BANDE
Husband's Name: NAMDEV BANDE
House Number : 0
Age : 33 Gender : Female
Photo Available

174 NXV4720397
Name : krushana bhonde
Father's Name: yovraj bhonde
House Number : 0
Age : 30 Gender : Male
Photo Available

175 NXV4720942
Name : ASHVINI JAANKAR
Husband's Name: INDRAJIT JAANKAR
House Number : 0
Age : 29 Gender : Female
Photo Available

176 NXV4720975
Name : SURAJ JADHAV
Father's Name: SOMNATH JADHAV
House Number : 0
Age : 26 Gender : Male
Photo Available

177 NXV4720991
Name : GITANJALI JADHAV
Husband's Name: SURAJ JADHAV
House Number : 0
Age : 26 Gender : Female
Photo Available

178 NXV4720066
Name : SUJATA KANADE
Husband's Name: VIJAY KANADE
House Number : 0
Age : 23 Gender : Female
Photo Available

179 NXV4720611
Name : SUNITA KAR NAVAR
Husband's Name: JANARDHAN KAR NAVAR
House Number : 0
Age : 36 Gender : Female
Photo Available

180 NXV4721395
Name : priti karanaavar
Husband's Name: santosh karanaavar
House Number : 0
Age : 22 Gender : Female
Photo Available

181 NXV4721361
Name : renuka karnavar
Husband's Name: vikas karnavar
House Number : 0
Age : 28 Gender : Female
Photo Available

182 NXV4720850
Name : KRUSHANA KHARAT
Mother's Name: LAXMI KHARAT
House Number : 0
Age : 30 Gender : Male
Photo Available

183 NXV4720876
Name : NAGNATH KHARAT
Mother's Name: LAXMI KHARAT
House Number : 0
Age : 25 Gender : Male
Photo Available

184 NXV4726915
Name : MANOJ KOLEKAR
Mother's Name: CHAYA KOLEKAR
House Number : 0
Age : 24 Gender : Male
Photo Available

185 NXV9984238
Name : indrjit koli
Father's Name: bhalchndra koli
House Number : 0
Age : 24 Gender : Male
Photo Available

186 NXV4727624
Name : SUVARNA MADNE
Husband's Name: VILAS MADNE
House Number : 0
Age : 36 Gender : Female
Photo Available

187 NXV9874660
Name : SUNANDA MALI
Husband's Name: BABAN MALI
House Number : 0
Age : 53 Gender : Female
Photo Available

188 NXV9984204
Name : getanjali naikwadi
Husband's Name: omprkash naikwadi
House Number : 0
Age : 36 Gender : Female
Photo Available

189 NXV9984246
Name : urmila naikwadi
Husband's Name: mahesh naikwadi
House Number : 0
Age : 32 Gender : Female
Photo Available

190 NXV4720504
Name : BHAGYASHRI PANDHARE
Others: DHULLAPPA PANDHARE
House Number : 0
Age : 34 Gender : Female
Photo Available

191 NXV4720777
Name : BHAGYASHRI PANDHARE
Husband's Name: MAHADEV PANDHARE
House Number : 0
Age : 32 Gender : Female
Photo Available

192 NXV4720710
Name : PUJA PANDHARE
Husband's Name: DHANAJI PANDHARE
House Number : 0
Age : 29 Gender : Female
Photo Available

193 NXV4727681
Name : VIVEK PAUL
Father's Name: DATTA PAUL
House Number : 0
Age : 26 Gender : Male
Photo Available

194 NXV4727780
Name : SHIVGANGA SALUNKE
Mother's Name: SAGARBAI RASAL
House Number : 0
Age : 40 Gender : Female
Photo Available

195 NXV4727244
Name : AKSHATA SALUNKE
Father's Name: PARMESHWAR SALUNKE
House Number : 0
Age : 25 Gender : Female
Photo Available

196 NXV4726998
Name : SOHEL SAYYAD
Mother's Name: FARIDA SAYYAD
House Number : 0
Age : 24 Gender : Male
Photo Available

197 NXV9874546
Name : BHAGYASHREE SHIRAL
Husband's Name: APPASAHEB SHIRAL
House Number : 0
Age : 43 Gender : Female
Photo Available

198 NXV4720132
Name : GANESH SHIRAL
Father's Name: BIBHISHAN SHIRAL
House Number : 0
Age : 29 Gender : Male
Photo Available

199 NXV4720256
Name : KEDAR SHIRAL
Father's Name: BIBHISHAN SHIRAL
House Number : 0
Age : 26 Gender : Male
Photo Available

200 NXV4720348
Name : vaishnavi shiral
Father's Name: bibhishan shiral
House Number : 0
Age : 24 Gender : Female
Photo Available

201 NXV9987140
Name : om shrishailya shiral
Father's Name: somnath shiral
House Number : 0
Age : 23 Gender : Male
Photo Available

202 NXV9874736
Name : PRAKASH TEKALE
Father's Name: HARIDAS TEKALE
House Number : 0
Age : 76 Gender : Male
Photo Available

203 NXV9874678
Name : PADMIN TEKALE
Husband's Name: PRAKASH TEKALE
House Number : 0
Age : 56 Gender : Female
Photo Available

204 NXV4721494
Name : PANDURANG THODSARE
Father's Name: PANDURANG THODSARE
House Number : 0
Age : 40 Gender : Male
Photo Available

205 NXV4721445
Name : MUKTA THODSARE
Others: AMBRUSHI THODSARE
House Number : 0
Age : 32 Gender : Female
Photo Available

206 NXV4726956
Name : SURAJ THORAT
Mother's Name: SINDHU THORAT
House Number : 0
Age : 23 Gender : Male
Photo Available

207 NXV9987116
Name : ASHVINI CHAUGULE
Husband's Name: BHAIRAVNATH CHAUGULE
House Number : 00
Age : 23 Gender : Female
Photo Available

208 NXV9987108
Name : NAYANSINGH CHAVAN
Father's Name: RANJITSINGH CHAVAN
House Number : 00
Age : 25 Gender : Male
Photo Available

209 NXV9984089
Name : AKSHAY DEDE
Father's Name: BALU DEDE
House Number : 00
Age : 26 Gender : Male
Photo Available

210 NXV9991688
Name : SUDARSHAN KANADE
Father's Name: SATLING KANADE
House Number : 00
Age : 26 Gender : Male
Photo Available

211 NXV9984097
Name : RANI LOKHANDE
Husband's Name: HANMANT LOKHANDE
House Number : 00
Age : 35 Gender : Female
Photo Available

212 NXV9984121
Name : RAJKANYA PANDHARE
Husband's Name: KRUSHNA PANDHARE
House Number : 00
Age : 24 Gender : Female
Photo Available

213 NXV9987124
Name : KETAN SHETE
Father's Name: ANIL SHETE
House Number : 00
Age : 24 Gender : Male
Photo Available

214 NXV9984063
Name : ANIKET SHIRAL
Father's Name: SHIVAJI SHIRAL
House Number : 00
Age : 27 Gender : Male
Photo Available

215 NXV9984071
Name : SUDARSHAN SUTAR
Father's Name: SUBHASH SUTAR
House Number : 00
Age : 25 Gender : Male
Photo Available

216 NXV4997391
Name : MANE PORNIMA BABASAHEB MANE
Father's Name: BABASAHEB MANE
House Number : House
Age : 23 Gender : Female
Photo Available

217 NXV4870622
Name : ABHINAV MANE
Others: DNYANESHWAR MANE
House Number : mane house
Age : 23 Gender : Male
Photo Available

218 NXV4789822
Name : Khandagale Komal Santosh
Husband's Name: Khandagale Santosh
House Number : Ter
Age : 38 Gender : Female
Photo Available

219 NXV9159559
Name : VAISHALI KRUSHNA BANDE
Husband's Name: KRUSHNA
House Number : TER
Age : 26 Gender : Female
Photo Available

220 NXV9158007
Name : KALYANI CHETAN BANSODE
Husband's Name: CHETAN
House Number : TER
Age : 34 Gender : Female
Photo Available

221 NXV9159567
Name : BHAIRAVNATH TUKARAM CHOUGULE
Father's Name: TUKARAM
House Number : TER
Age : 32 Gender : Male
Photo Available

222 NXV9158031
Name : MANISHA ANKUSH DESHAMUKH
Husband's Name: ANKUSH
House Number : TER
Age : 35 Gender : Female
Photo Available

223 NXV9158049
Name : ARATI BALAJI DESHAMUKH
Husband's Name: BALAJI
House Number : TER
Age : 32 Gender : Female
Photo Available

224 NXV4964722
Name : Aashlesha Khandu Devkar
Husband's Name: Khandu Devkar
House Number : Ter
Age : 22 Gender : Female
Photo Available

225 NXV9158668
Name : VIKAS RANAJIT KARANAVAR
Father's Name: RANAJIT
House Number : TER
Age : 31 Gender : Male
Photo Available

226 NXV9158056
Name : YOGESHWARI PRADIP KARANAVAR
Husband's Name: PRADIP
House Number : TER
Age : 27 Gender : Female
Photo Available

227 NXV9158023
Name : SUNITA ANIL KHANDEKAR
Husband's Name: ANIL
House Number : TER
Age : 45 Gender : Female
Photo Available

228 NXV9158809
Name : ASHOK SUBHASH MADANE
Father's Name: SUBHASH
House Number : TER
Age : 40 Gender : Male
Photo Available

229 NXV9158072
Name : BHAGYASHRI ASHOK MADANE
Husband's Name: ASHOK
House Number : TER
Age : 36 Gender : Female
Photo Available

230 NXV9158601
Name : BALAJI VASANT MADANE
Father's Name: VASANT
House Number : TER
Age : 27 Gender : Male
Photo Available

231 NXV9159112
Name : MAHESH SHIVAJI MADANE
Father's Name: SHIVAJI
House Number : TER
Age : 27 Gender : Male
Photo Available

232 NXV9159104
Name : DINESH BHARAT MADANE
Father's Name: BHARAT
House Number : TER
Age : 27 Gender : Male
Photo Available

233 NXV9158080
Name : PRITI NANDAKUMAR MANE
Husband's Name: NANDAKUMAR
House Number : TER
Age : 43 Gender : Female
Photo Available

234 NXV9158098
Name : POOJA KARAN MASKE
Husband's Name: KARAN
House Number : TER
Age : 29 Gender : Female
Photo Available

235 NXV9159120
Name : SNEHA LAHU PAWAR
Husband's Name: LAHU
House Number : TER
Age : 29 Gender : Female
Photo Available

236 NXV9158650
Name : ADITY DIPAK SALAGAR
Father's Name: DIPAK
House Number : TER
Age : 27 Gender : Male
Photo Available

237 NXV9159542
Name : RATANABAI BAPU TAKALE
Husband's Name: BAPU
House Number : TER
Age : 40 Gender : Female
Photo Available

238 NXV9426818
Name : ashwini hegadkar
Husband's Name: meghraj hegadkar
House Number : 05a
Age : 27 Gender : Female
Photo Available

239 NXV4101358
Name : Usha Lahu Rodage
Husband's Name: Lahu Rodage
House Number : 21
Age : 42 Gender : Female
Photo Available

240 NXV4909180
Name : PRASHANT ANIL KHANDEKAR KHANDEKAR
Mother's Name: SUNITA ANIL KHANDEKAR KHANDEKAR
House Number : 86
Age : 26 Gender : Male
Photo Available

241 NXV9280579
Name : YUSUF MUSTAIN MOMIN
Father's Name: MUSTAIN MOMIN
House Number : 101
Age : 34 Gender : Male
Photo Available

242 NXV9362948
Name : sharmila saraf
Father's Name: dhananjay saraf
House Number : 102
Age : 26 Gender : Female
Photo Available

243 NXV7733256
Name : AMEER CHANDPASHA KABIR JULAHA
Father's Name: Chandpasha Kadir
House Number : 103
Age : 37 Gender : Male
Photo Available

244 NXV9933425
Name : Kranti Kalyan Kolekar
Husband's Name: Kalyan Kolekar
House Number : 123
Age : 40 Gender : Female
Photo Available

245 NXV4720892
Name : PANDURANG KHARAT
Father's Name: UTTAM KHARAT
House Number : 140
Age : 25 Gender : Male
Photo Available

246 NXV4811808
Name : Ganesh Harishchandra Panchal
Father's Name: Harishchandra Panchal
House Number : 154
Age : 45 Gender : Male
Photo Available

247 KQJ0711044
Name : Meeta Deepak Salgar
Husband's Name: Deepak Salgar
House Number : 284
Age : 47 Gender : Female
Photo Available

248 NXV1588524
Name : Nandkishore Revansidhd Lamture
Father's Name: Revansidhd Lamture
House Number : 287
Age : 47 Gender : Male
Photo Available

249 KQJ0710442
Name : Appa Ramaling Kokre
Father's Name: Ramaling Kokre
House Number : 288/
Age : 43 Gender : Male
Photo Available

250 NXV4964664
Name : Sujit Dilip Shinde
Father's Name: Dilip Shinde
House Number : 310
Age : 21 Gender : Male
Photo Available

251 NXV4101267
Name : Suwarna Rajendra Dhumal
Husband's Name: Rajendra Dhumal
House Number : 324
Age : 37 Gender : Female
Photo Available

252 NXV9318056
Name : ALVIDA AKIL MULANI
Husband's Name: AKIL MULANI
House Number : 345
Age : 29 Gender : Female
Photo Available

253 NXV9318817
Name : SHIRIN MALANGSHAHA FAKIR
Husband's Name: MALANGSHAHA FAKIR
House Number : 350
Age : 33 Gender : Female
Photo Available

254 NXV4101275
Name : Suleman Shamashodin Faqeer
Father's Name: Shamashodin Faqeer
House Number : 352
Age : 37 Gender : Male
Photo Available

255 NXV7070444
Name : Madhvi Padamnabh Vyas
Husband's Name: Padamnabh Vyas
House Number : 372
Age : 38 Gender : Female
Photo Available

256 NXV9318031
Name : VIDYA SATISH KASABE
Husband's Name: SATISH KASABE
House Number : 402
Age : 32 Gender : Female
Photo Available

257 NXV9312125
Name : APARNA ATUL DHEKANE
Husband's Name: ATUL DHEKANE
House Number : 418
Age : 35 Gender : Female
Photo Available

258 NXV9318189
Name : RUKMINI RAJENDRA ZINJE
Husband's Name: RAJENDRA ZINJE
House Number : 425
Age : 38 Gender : Female
Photo Available

259 NXV3004462
Name : Meena Balaji Sammrat
Husband's Name: Balaji Sammrat
House Number : 440
Age : 39 Gender : Female
Photo Available

260 KQJ0710723
Name : Balaji Subhash Samrat
Father's Name: Subhash Samrat
House Number : 440
Age : 45 Gender : Male
Photo Available

261 NXV9319740
Name : SHITAL KESHAV PANDHARE
Husband's Name: KESHAV PANDHARE
House Number : 549
Age : 36 Gender : Female
Photo Available

262 NXV9319724
Name : POOJA ACHUT PANDHARE
Husband's Name: ACHUT PANDHARE
House Number : 550
Age : 35 Gender : Female
Photo Available

263 NXV4965687
Name : Simran Tofik Kabir
Mother's Name: Shakilabi Kabir
House Number : 654
Age : 29 Gender : Female
Photo Available

264 NXV4964821
Name : Tofik Mustafa Kabir
Father's Name: Mustafa Kabir
House Number : 654
Age : 28 Gender : Male
Photo Available

265 KQJ0710806
Name : Vikas Janak Shinde
Father's Name: Janak Shinde
House Number : 668
Age : 53 Gender : Male
Photo Available

266 KQJ1467349
Name : Jayashri Vikas Shinde
Husband's Name: Vikas Shinde
House Number : 668
Age : 46 Gender : Female
Photo Available

267 KQJ0713289
Name : Suman Mahaling Rodage
Husband's Name: Mahaling Rodage
House Number : 669
Age : 74 Gender : Female
Photo Available

268 KQJ0744995
Name : Chandrakant Mahaling Rodage
Father's Name: Mahaling Rodage
House Number : 669
Age : 54 Gender : Male
Photo Available

269 NXV7733280
Name : Savita Chandrakant Rodage
Husband's Name: Chandrakant Rodage
House Number : 669
Age : 48 Gender : Female
Photo Available

270 KQJ0744367
Name : Ankush Mahaling Rodage
Father's Name: Mahaling Rodage
House Number : 669
Age : 46 Gender : Male
Photo Available

271 NXV7733272
Name : Kavita Nandkumar Rodage
Husband's Name: Nandkumar Rodage
House Number : 669
Age : 46 Gender : Female
Photo Available

272 KQJ0744037
Name : Lahu Mahaling Rodage
Father's Name: Mahaling Rodage
House Number : 669
Age : 49 Gender : Male
Photo Available

273 KQJ0742429
Name : Gurunatha Mahaling Rodage
Father's Name: Mahaling Rodage
House Number : 669
Age : 44 Gender : Male
Photo Available

274 KQJ0713297
Name : Sunil Mahaling Rodage
Father's Name: Mahaling Rodage
House Number : 669
Age : 43 Gender : Male
Photo Available

275 KQJ0744680
Name : Nandkumar Mahaling Rondage
Father's Name: Mahaling Rondage
House Number : 669
Age : 48 Gender : Male
Photo Available

276 NXV7733298
Name : Siddheshwar Ramaling Rodage
Father's Name: Ramaling Rodage
House Number : 670
Age : 69 Gender : Male
Photo Available

277 NXV5120316
Name : OMKAR DATTA DHEKANE DHEKANE
Father's Name: DATTA BABASAHEB DHEKANE DHEKANE
House Number : 337
Age : 23 Gender : Male
Photo Available

278 NXV4964714
Name : Heena Karim Kabir
Husband's Name: Karim Kabir
House Number : 672
Age : 30 Gender : Female
Photo Available

279 NXV1588441
Name : Sanjeevani Vishwanath Khodave
Husband's Name: Vishwanath Khodave
House Number : 673
Age : 57 Gender : Female
Photo Available

280 KQJ0713099
Name : Vikas Vishwanath Khodave
Father's Name: Vishwanath Khodave
House Number : 673
Age : 42 Gender : Male
Photo Available

281 NXV8163636
Name : Kaushal Ya Ut Tareshvar Kande
Husband's Name: Ut Tareshvar Kande
House Number : 674
Age : 74 Gender : Female
Photo Available

282 KQJ0742734
Name : Siddheshwar Trimbak Waghmare
Father's Name: Trimbak Waghmare
House Number : 674
Age : 69 Gender : Male
Photo Available

283 NXV7202534
Name : Shivaganga Siddheshwar Waghmare
Husband's Name: Siddheshwar Waghmare
House Number : 674
Age : 59 Gender : Female
Photo Available

284 NXV7202542
Name : Shivarudr Siddheshwar Waghmare
Father's Name: Siddheshwar Waghmare
House Number : 674
Age : 40 Gender : Male
Photo Available

285 NXV1577832
Name : DATTATRAYA KANADE
Father's Name: Shivraj Kande
House Number : 676
Age : 35 Gender : Male
Photo Available

286 NXV9809591
Name : Kamal Shivraj Kande
Husband's Name: Shivraj Kande
House Number : 676
Age : 64 Gender : Female
Photo Available

287 NXV7528300
Name : Jyoti Chandrakant Kande
Husband's Name: Chandrakant Kande
House Number : 676
Age : 64 Gender : Female
Photo Available

288 KQJ1467323
Name : Chandrakant Nivrut T. Kande
Father's Name: Nivrut T. Kande
House Number : 676
Age : 64 Gender : Male
Photo Available

289 NXV1588466
Name : Suwarna Shivraj Kande
Husband's Name: Shivraj Kande
House Number : 676
Age : 42 Gender : Female
Photo Available

290 KQJ0743245
Name : Santosh Chandrakant Kande
Father's Name: Chandrakant Kande
House Number : 676
Age : 38 Gender : Male
Photo Available

291 KQJ0743237
Name : Balaji Shivraj Kande
Father's Name: Shivraj Kande
House Number : 676
Age : 38 Gender : Male
Photo Available

292 KQJ0742676
Name : Rudrap Pa Kashinath Kande
Father's Name: Kashinath Kande
House Number : 677
Age : 59 Gender : Male
Photo Available

293 NXV1588458
Name : Jayashri Rudrappa Kande
Husband's Name: Rudrappa Kande
House Number : 677
Age : 54 Gender : Female
Photo Available

294 KQJ1467109
Name : Laxmi Mahaling Kande
Husband's Name: Mahaling Kande
House Number : 678
Age : 84 Gender : Female
Photo Available

295 KQJ0713396
Name : Seema Rajendra Kande
Husband's Name: Rajendra Kande
House Number : 678
Age : 50 Gender : Female
Photo Available

296 KQJ0713404
Name : Rajendra Mahaling Kande
Father's Name: Mahaling Kande
House Number : 678
Age : 47 Gender : Male
Photo Available

297 KQJ0713115
Name : Hanumant Mahaling Kande
Father's Name: Mahaling Kande
House Number : 678
Age : 47 Gender : Male
Photo Available

298 KQJ1466671
Name : SANGITA Kande
Husband's Name: SATLING Kande
House Number : 680
Age : 100 Gender : Female
Photo Available

299 NXV0013144
Name : Sataling Ganpati Kande
Father's Name: Ganpati Kande
House Number : 680
Age : 54 Gender : Male
Photo Available

300 KQJ0742403
Name : Sopan Ganpati Kande
Father's Name: Ganpati Kande
House Number : 680
Age : 44 Gender : Male
Photo Available

301 KQJ0742189
Name : Balaji Dhondiram Ingale
Father's Name: Dhondiram Ingale
House Number : 682
Age : 45 Gender : Male
Photo Available

302 NXV7732969
Name : Tanaji Dhondiram Ingle
Father's Name: Dhondiram Ingle
House Number : 682
Age : 51 Gender : Male
Photo Available

303 KQJ1466184
Name : Surekha Tanaji Ingle
Husband's Name: Tanaji Ingle
House Number : 682
Age : 44 Gender : Female
Photo Available

304 NXV0013201
Name : Balkrishna Sadashiv Shiral
Father's Name: Sadashiv Shiral
House Number : 689
Age : 59 Gender : Male
Photo Available

305 NXV0013219
Name : Sanjeevani Balkrishna Shiral
Husband's Name: Balkrishna Shiral
House Number : 689
Age : 54 Gender : Female
Photo Available

306 NXV0013227
Name : Vishwanath Sadashiv Shiral
Father's Name: Sadashiv Shiral
House Number : 689
Age : 53 Gender : Male
Photo Available

307 KQJ0713263
Name : Vaishali Vishwanath Shiral
Husband's Name: Vishwanath Shiral
House Number : 689
Age : 47 Gender : Female
Photo Available

308 KQJ1466416
Name : Mandodharibai Shankar Shiral
Husband's Name: Shankar Shiral
House Number : 690
Age : 74 Gender : Female
Photo Available

309 KQJ0712596
Name : Bibhishan Shankar Shiral
Father's Name: Shankar Shiral
House Number : 690
Age : 59 Gender : Male
Photo Available

310 NXV5069638
Name : APARNA GHODKE
Father's Name: NANDU GHODKE
House Number : 0
Age : 20 Gender : Female
Photo Available

311 KQJ0712760
Name : Somnath Shankar Shiral
Father's Name: Shankar Shiral
House Number : 690
Age : 54 Gender : Male
Photo Available

312 NXV4941951
Name : Suvarna Bibhishan Shiral
Mother's Name: Bibhishan Shiral
House Number : 690
Age : 48 Gender : Female
Photo Available

313 KQJ0712752
Name : Kavita Somnath Shiral
Husband's Name: Somnath Shiral
House Number : 690
Age : 44 Gender : Female
Photo Available

314 NXV1588839
Name : Dhondiram Mahalingap Pa Shiral
Father's Name: Mahalingap Pa Shiral
House Number : 691
Age : 84 Gender : Male
Photo Available

315 NXV9411596
Name : ANKITA SHIRAL
Father's Name: MAHARUDRA SHIRAL
House Number : 691
Age : 27 Gender : Female
Photo Available

316 KQJ0744300
Name : Mahadev Man Yamath Shiral
Father's Name: Man Yamath Shiral
House Number : 692
Age : 64 Gender : Male
Photo Available

317 KQJ0745448
Name : Chaya Rama Randive
Husband's Name: Rama Randive
House Number : 692
Age : 54 Gender : Female
Photo Available

318 KQJ0743708
Name : Shivaji Man Math Shiral
Father's Name: Man Math. Shiral
House Number : 692
Age : 51 Gender : Male
Photo Available

319 KQJ0743716
Name : Sumitra Shivaji Shiral
Husband's Name: Shivaji Shiral
House Number : 692
Age : 45 Gender : Female
Photo Available

320 KQJ0745737
Name : Dadasaheb Basling Shiral
Father's Name: Basling Shiral
House Number : 692
Age : 45 Gender : Male
Photo Available

321 NXV1588516
Name : Avinash Basling Shiral
Father's Name: Basling Shiral
House Number : 692
Age : 36 Gender : Male
Photo Available

322 NXV4941993
Name : Ramling Mahadev Shiral
Father's Name: Mahadev Shiral
House Number : 692
Age : 26 Gender : Male
Photo Available

323 KQJ0744623
Name : Gangabai Basling Shiral
Husband's Name: Basling Shiral
House Number : 692
Age : 69 Gender : Female
Photo Available

324 KQJ0745430
Name : Savitrabai Gurulingapp Shiral
Husband's Name: Gurulingap Pa Shiral
House Number : 693
Age : 64 Gender : Female
Photo Available

325 KQJ0745612
Name : Gurulingap Pa Ganpati Shiral
Father's Name: Ganpati Shiral
House Number : 693
Age : 74 Gender : Male
Photo Available

326 NXV7731946
Name : Maltibai Shantanurav V Yas
Husband's Name: Shantanurav V Yas
House Number : 695
Age : 89 Gender : Female
Photo Available

327 NXV0013243
Name : Ambubai Ramchandra Joshi
Husband's Name: Ramchandra Joshi
House Number : 696
Age : 77 Gender : Female
Photo Available

328 NXV0013259
Name : Ambadas Ramchandra Joshi
Father's Name: Ramchandra Joshi
House Number : 696
Age : 69 Gender : Male
Photo Available

329 NXV0013269
Name : Aparna Ambadas Joshi
Husband's Name: Ambadas Joshi
House Number : 696
Age : 61 Gender : Female
Photo Available

330 KQJ1466101
Name : Vimalchandra Ramchandra Joshi
Father's Name: Ramchandra Joshi
House Number : 696
Age : 54 Gender : Male
Photo Available

331 KQJ0742775
Name : Vaishali Vimalchand Joshi
Husband's Name: Vimalchand Joshi
House Number : 696
Age : 51 Gender : Female
Photo Available

332 NXV4942405
Name : Radha Mahadev Kachare
Others: Kalinda Kachare
House Number : 697a
Age : 50 Gender : Female
Photo Available

333 NXV4942413
Name : Mahadev Bhagavat Kachare
Father's Name: Bhagavat Kachare
House Number : 697a
Age : 46 Gender : Male
Photo Available

334 NXV1577881
Name : Shashikalabai Harish Chandra Lamture
Husband's Name: Harish Chandra Lamture
House Number : 699
Age : 79 Gender : Female
Photo Available

335 NXV1577899
Name : Anand Harish Chandra Lamture
Father's Name: Harish Chandra Lamture
House Number : 699
Age : 61 Gender : Male
Photo Available

336 KQJ1467083
Name : Karuna Anand Lamture
Husband's Name: Anand Lamture
House Number : 699
Age : 48 Gender : Female
Photo Available

337 NXV5079157
Name : Rahul Balasaheb Umate
Father's Name: Balasaheb Umate
House Number : House No.908
Age : 24 Gender : Male
Photo Available

338 KQJ0741595
Name : Mukund Harishachand Lamture
Father's Name: Harishachand Lamture
House Number : 699
Age : 48 Gender : Male
Photo Available

339 KQJ1467133
Name : Sarika Mukund Lamture
Husband's Name: Mukund Lamture
House Number : 699
Age : 46 Gender : Female
Photo Available

340 NXV5088000
Name : PRATIKSHA SHELKE
Father's Name: NARENDRA SHELKE
House Number : narsing galli
Age : 22 Gender : Female
Photo Available

341 NXV1748177
Name : Revansidhd Bhagavatappa Lamture
Father's Name: Bhagavatap Pa Lamture
House Number : 700
Age : 69 Gender : Male
Photo Available

342 NXV0013318
Name : Prabhavati Revanasindhd Lamture
Husband's Name: Revanasindhd Lamture
House Number : 700
Age : 64 Gender : Female
Photo Available

343 KQJ0745471
Name : Balkrishna Bhagavatap Pa Lamture
Father's Name: Bhagavatap Pa Lamture
House Number : 700
Age : 59 Gender : Male
Photo Available

344 KQJ1467356
Name : Mahadev Bhagavatap Pa Lamture
Father's Name: Bhagavatap Pa Lamture
House Number : 700
Age : 57 Gender : Male
Photo Available

345 NXV1588532
Name : Bhalchandra Bhagavatap Pa Lamture
Father's Name: Bhagavatap Pa Lamture
House Number : 700
Age : 55 Gender : Male
Photo Available

346 NXV0013289
Name : Vitthal Bhagavatap Pa Lamture
Father's Name: Bhagavatap Pa Lamture
House Number : 700
Age : 55 Gender : Male
Photo Available

347 NXV1748193
Name : Vaishali Balkrishna Lamture
Husband's Name: Balkrishna Lamture
House Number : 700
Age : 54 Gender : Female
Photo Available

348 NXV7202575
Name : Ashabai Mahadev Lamture
Husband's Name: Mahadev Lamture
House Number : 700
Age : 51 Gender : Female
Photo Available

349 NXV7731987
Name : Gopal Bhagavatap Pa Lamture
Father's Name: Bhagavatap Pa Lamture
House Number : 700
Age : 50 Gender : Male
Photo Available

350 NXV1588540
Name : Anjali Bhalchandra Lamture
Husband's Name: Bhalchandra Lamture
House Number : 700
Age : 49 Gender : Female
Photo Available

351 KQJ1467281
Name : Seema Vitthal Lamture
Husband's Name: Vitthal Lamture
House Number : 700
Age : 47 Gender : Female
Photo Available

352 NXV0013300
Name : Chaitali Revanasindhd Lamture
Husband's Name: Revanasindhd Lamture
House Number : 700
Age : 47 Gender : Female
Photo Available

353 NXV1588557
Name : Madhusudan Revansidhd Lamture
Father's Name: Revansidhd Lamture
House Number : 700
Age : 45 Gender : Male
Photo Available

354 NXV7202765
Name : Baban Narayan Kokare
Father's Name: Narayan Kokare
House Number : 701
Age : 57 Gender : Male
Photo Available

355 KQJ1466168
Name : Vasant Prabhu Madane
Father's Name: Prabhu Madane
House Number : 701
Age : 58 Gender : Male
Photo Available

356 NXV7733181
Name : Balika Shivaji Madane
Husband's Name: Shivaji Madane
House Number : 701
Age : 47 Gender : Female
Photo Available

357 KQJ1466200
Name : Parvati Vasant Madane
Husband's Name: Vasant Madane
House Number : 701
Age : 42 Gender : Female
Photo Available

358 KQJ0713172
Name : Dhananjay Limbaji Shinde
Father's Name: Limbaji Shinde
House Number : 701
Age : 42 Gender : Male
Photo Available

359 KQJ0744094
Name : Rupchandra Pral Had Koli
Father's Name: Pral Had Koli
House Number : 703
Age : 58 Gender : Male
Photo Available

360 KQJ0744201
Name : Nirmalabai Rupchandra Koli
Husband's Name: Rupchandra Koli
House Number : 703
Age : 54 Gender : Female
Photo Available

361 KQJ0743583
Name : Anita Somnath Koli
Husband's Name: Somnath Koli
House Number : 703
Age : 44 Gender : Female
Photo Available

362 NXV1577907
Name : Datta Fulchand Koli
Father's Name: Fulchand Koli
House Number : 703
Age : 44 Gender : Male
Photo Available

363 NXV1577915
Name : Rahul Rupanchad Koli
Father's Name: Rupanchad Koli
House Number : 703
Age : 37 Gender : Male
Photo Available

364 KQJ0744219
Name : Saras Vatibai Arjun Shelke
Husband's Name: Arjun Shelke
House Number : 709
Age : 64 Gender : Female
Photo Available

365 KQJ0742601
Name : Vitthal Arjun Shelke
Father's Name: Arjun Shelke
House Number : 709
Age : 44 Gender : Male
Photo Available

366 KQJ0742759
Name : Mahadev Arjun Shelke
Father's Name: Arjun Shelke
House Number : 709
Age : 44 Gender : Male
Photo Available

367 NXV7202609
Name : Savita Vitthal Shelke
Husband's Name: Vitthal Shelke
House Number : 709
Age : 37 Gender : Female
Photo Available

368 KQJ0742163
Name : Dhananjay Ramchandra Saraf
Father's Name: Ramchandra Saraf
House Number : 710
Age : 58 Gender : Male
Photo Available

369 KQJ0743831
Name : Madhuribai Dhananjay Saraf
Husband's Name: Dhananjay Saraf
House Number : 710
Age : 53 Gender : Female
Photo Available

370 KQJ1467406
Name : Vijay Kumar Keshav Rao Saraf
Father's Name: Keshavarat Saraf
House Number : 712
Age : 68 Gender : Male
Photo Available

371 KQJ1467398
Name : Sumanabaivijayakumar Vijay Kumar Saraf
Husband's Name: Vijay Kumar Saraf
House Number : 712
Age : 66 Gender : Female
Photo Available

372 NXV1577980
Name : Ganesh Vijay Kumar Saraf
Father's Name: Vijay Kumar Saraf
House Number : 712
Age : 46 Gender : Male
Photo Available

373 KQJ0745414
Name : Prasad Vijay Kumar Saraf
Father's Name: Vijay Kumar Saraf
House Number : 712
Age : 40 Gender : Male
Photo Available

374 KQJ0743575
Name : Kesharbai Ramchandra Nagargoje
Husband's Name: Ramchandra Nagargoje
House Number : 713
Age : 74 Gender : Female
Photo Available

375 NXV7202617
Name : Babasaheb Sambhaji Nagargoje
Father's Name: Sambhaji Nagargoje
House Number : 713
Age : 65 Gender : Male
Photo Available

376 NXV7202625
Name : Daivshala Babasaheb Nagargoje
Husband's Name: Babasaheb Nagargoje
House Number : 713
Age : 55 Gender : Female
Photo Available

377 KQJ1467026
Name : Riteshasing Prakash Singh Chauhan
Father's Name: Prakash Singh Chauhan
House Number : 715
Age : 45 Gender : Male
Photo Available

378 NXV1577998
Name : Mithun Prakash Singh Chauhan
Father's Name: Prakash Singh Chauhan
House Number : 715
Age : 38 Gender : Male
Photo Available

379 NXV1578004
Name : Moti Singh Shankr Singh Chauhan
Father's Name: Shankr Singh Chauhan
House Number : 716
Age : 83 Gender : Male
Photo Available

380 NXV1578012
Name : Nilavati Moti Singh Chauhan
Husband's Name: Motisig Chauhan
House Number : 716
Age : 76 Gender : Female
Photo Available

381 KQJ0745620
Name : Ranjit Singh Moti Singh Chauhan
Father's Name: Motisig Chauhan
House Number : 716
Age : 49 Gender : Male
Photo Available

382 NXV1578038
Name : Pooja Viththal Singh Chauhan
Husband's Name: Viththal Singh Chauhan
House Number : 716
Age : 49 Gender : Female
Photo Available

383 KQJ0745638
Name : Swati Chauhan
Husband's Name: Ranjitasing Chauhan
House Number : 716
Age : 46 Gender : Female
Photo Available

384 NXV7732035
Name : Laxmi Prakash Kharat
Husband's Name: Prakash Kharat
House Number : 716
Age : 46 Gender : Female
Photo Available

385 NXV5031935
Name : PALLAVI MATE
Father's Name: BALAJI MATE
House Number : 0
Age : 22 Gender : Female
Photo Available

386 NXV0013378
Name : Tukaram Mahadev Chaugule
Father's Name: Mahadev Chaugule
House Number : 719
Age : 74 Gender : Male
Photo Available

387 NXV0013388
Name : Sita Bai Tukaram Chaugule
Husband's Name: Tukaram Chaugule
House Number : 719
Age : 64 Gender : Female
Photo Available

388 NXV7733140
Name : Kashibai Bhagawat Khatavkar
Husband's Name: Bhagawat Khatavkar
House Number : 720
Age : 69 Gender : Female
Photo Available

389 KQJ1467372
Name : Mahadev Bhagawat Khatavkar
Father's Name: Bhagawat Khatavkar
House Number : 720
Age : 47 Gender : Male
Photo Available

390 KQJ0743419
Name : Keshav Bhagawat Khatavkar
Father's Name: Bhagawat Khatavkar
House Number : 720
Age : 45 Gender : Male
Photo Available

391 KQJ0743427
Name : Kirtimala Mahadev Khatavkar
Husband's Name: Mahadev Khatavkar
House Number : 720
Age : 42 Gender : Female
Photo Available

392 NXV4101176
Name : Narendra Pandurang Shelke
Father's Name: Pandurang Shelke
House Number : 720
Age : 47 Gender : Male
Photo Available

393 NXV7202641
Name : Uttam Dagadu Kharat
Father's Name: Dagadu Kharat
House Number : 721
Age : 59 Gender : Male
Photo Available

394 NXV7732043
Name : Prakash Dagdu Kharat
Father's Name: Dagdu Kharat
House Number : 721
Age : 47 Gender : Female
Photo Available

395 NXV4101184
Name : Anjali Balaji Pandhare
Husband's Name: Balaji Pandhare
House Number : 721
Age : 36 Gender : Female
Photo Available

396 NXV7202658
Name : Khurshid Dadamiya Fakir
Father's Name: Dadamiya Fakir
House Number : 722
Age : 88 Gender : Male
Photo Available

397 KQJ0745794
Name : Rashid Yakhub Shaha
Father's Name: Yakhub Shaha
House Number : MEHAR HOUSE
Age : 75 Gender : Male
Photo Available

398 KQJ1467117
Name : Rahidabi Khurshid Faqir
Husband's Name: Khurshid Faqir
House Number : 722
Age : 48 Gender : Female
Photo Available

399 NXV4101218
Name : Vaibhav Rudrappa Kande
Father's Name: Rudrappa Kande
House Number : 722
Age : 35 Gender : Male
Photo Available

400 NXV4101234
Name : Amol Nandu Naikvadi
Father's Name: Nandu Naikvadi
House Number : 722
Age : 40 Gender : Male
Photo Available

401 NXV4101226
Name : Urmila Santosh Samrat
Husband's Name: Santosh Samrat
House Number : 722
Age : 36 Gender : Female
Photo Available

402 NXV9411539
Name : DHIRAJKUMAR RAJESH SHIRAL
Father's Name: RAJESH SHIRAL
House Number : 0
Age : 28 Gender : Male
Photo Available

403 KQJ0745042
Name : Rajabhau Shesherao Madane
Father's Name: Shesherao Madane
House Number : 724
Age : 51 Gender : Male
Photo Available

404 KQJ0745059
Name : Latabai Rajabhau Madane
Husband's Name: Rajabhau Madane
House Number : 724
Age : 47 Gender : Female
Photo Available

405 KQJ0711051
Name : Savita Anna Madane
Husband's Name: Anna Madane
House Number : 724
Age : 46 Gender : Female
Photo Available

406 KQJ0164228
Name : Janabai Narayan Madane
Husband's Name: Narayan Madane
House Number : 725
Age : 84 Gender : Female
Photo Available

407 KQJ0712810
Name : Hanumant Narayan Madane
Father's Name: Narayan Madane
House Number : 725
Age : 61 Gender : Male
Photo Available

408 KQJ0741991
Name : Gurunath Narayan Madane
Father's Name: Narayan Madane
House Number : 725
Age : 54 Gender : Male
Photo Available

409 KQJ0742783
Name : Shamal Gurunath Madane
Husband's Name: Gurunath Madane
House Number : 725
Age : 49 Gender : Female
Photo Available

410 KQJ0712802
Name : Hemlata Hanumant Madane
Husband's Name: Hanumant Madane
House Number : 725
Age : 41 Gender : Female
Photo Available

411 NXV7732076
Name : Kondabai Mahadu Pawar
Husband's Name: Mahadu Pawar
House Number : 726
Age : 77 Gender : Female
Photo Available

412 KQJ0741959
Name : Ankush Mahadu Pawar
Father's Name: Mahadu Pawar
House Number : 726
Age : 49 Gender : Male
Photo Available

413 NXV3004421
Name : Ashwini Ankush Pawar
Husband's Name: Ankush Pawar
House Number : 726
Age : 44 Gender : Female
Photo Available

414 NXV7732084
Name : Jyotiba Mahadev Pawar
Father's Name: Mahadev Pawar
House Number : 726
Age : 40 Gender : Male
Photo Available

415 NXV7732092
Name : Lahu Mahadev Pawar
Father's Name: Mahadev Pawar
House Number : 726
Age : 38 Gender : Male
Photo Available

416 NXV4101200
Name : Ashwini Nivrutti Kande
Husband's Name: Nivrutti Kande
House Number : 727
Age : 35 Gender : Female
Photo Available

417 NXV4964839
Name : Kavita Dhanraj Kokare
Husband's Name: Dhanraj Kokare
House Number : 727
Age : 28 Gender : Female
Photo Available

418 NXV4101333
Name : Saraswati Gopinath Shinde
Husband's Name: Gopinath Shinde
House Number : 727
Age : 53 Gender : Female
Photo Available

419 KQJ0712117
Name : Chandar Shankar Shirgire
Father's Name: Shankar Shirgire
House Number : 727
Age : 71 Gender : Male
Photo Available

420 KQJ0711036
Name : Latabai Chandar Shirgire
Husband's Name: Chandar Shirgire
House Number : 727
Age : 64 Gender : Female
Photo Available

421 NXV7202666
Name : Hanumant Chandar Shirgire
Father's Name: Chandar Shirgire
House Number : 727
Age : 46 Gender : Male
Photo Available

422 KQJ0745943
Name : Gunvant Chandar SHIRGIRE
Father's Name: Chandar CHANDAR SHIRGIRE
House Number : 727
Age : 44 Gender : Male
Photo Available

423 NXV7732100
Name : Anjana Gunvant Shirgire
Husband's Name: Gunvant Shirgire
House Number : 727
Age : 44 Gender : Female
Photo Available

424 NXV4101341
Name : Jayashri Dhulaba Shirgire
Husband's Name: Dhulaba Shirgire
House Number : 727
Age : 43 Gender : Female
Photo Available

425 KQJ0743229
Name : Kotabai Nar Singh Adke
Husband's Name: Nar Singh Adke
House Number : 728
Age : 84 Gender : Female
Photo Available

426 KQJ0744961
Name : Shahu Dnyanoba Padule
Father's Name: Dnyanoba Padule
House Number : 728
Age : 69 Gender : Male
Photo Available

427 KQJ0744979
Name : Rukmin Shahu Padule
Husband's Name: Shahu Padule
House Number : 728
Age : 64 Gender : Female
Photo Available

428 NXV7202682
Name : Ashruba Dnyanoba Padule
Father's Name: Dnyanoba Padule
House Number : 728
Age : 64 Gender : Male
Photo Available

429 NXV7202690
Name : Meera Ashruba Padule
Husband's Name: Ashruba Padule
House Number : 728
Age : 59 Gender : Female
Photo Available

430 NXV5031307
Name : Bhagyashree Supnawar
Husband's Name: Balaji mahadev supnawar supnawar
House Number : 5
Age : 22 Gender : Female
Photo Available

431 KQJ0742536
Name : Navnath Dnyanoba Padule
Father's Name: Dnyanoba Padule
House Number : 728
Age : 54 Gender : Male
Photo Available

432 KQJ0742544
Name : Chhaya Navnath Padule
Husband's Name: Navnath Padule
House Number : 728
Age : 49 Gender : Female
Photo Available

433 NXV1588599
Name : Anant Dnyanoba Padule
Father's Name: Dnyanoba Padule
House Number : 728
Age : 48 Gender : Male
Photo Available

434 NXV1588607
Name : Rekha Anant Padule
Husband's Name: Anant Padule
House Number : 728
Age : 44 Gender : Female
Photo Available

435 NXV7732134
Name : Narmada Nagurav Padunle
Husband's Name: Nagurav Padunle
House Number : 729
Age : 85 Gender : Female
Photo Available

436 KQJ1467240
Name : Goroba Padule
Father's Name: Nagurav Padunle
House Number : 729
Age : 55 Gender : Male
Photo Available

437 KQJ1467232
Name : Sunanda Goroba Padunle
Husband's Name: Goroba Padunle
House Number : 729
Age : 48 Gender : Female
Photo Available

438 NXV7733082
Name : Vijayabai Bhimrao Kanade
Husband's Name: Bhimrao Kanade
House Number : 731
Age : 69 Gender : Female
Photo Available

439 NXV7732167
Name : Kontabai Arjun Kanade
Husband's Name: Arjun Kanade
House Number : 732
Age : 60 Gender : Female
Photo Available

440 KQJ0741967
Name : Khandu Arjun Kande
Father's Name: Arjun Kande
House Number : 732
Age : 43 Gender : Male
Photo Available

441 NXV1588631
Name : Rajendra Arjun Kande
Father's Name: Arjun Kande
House Number : 732
Age : 37 Gender : Male
Photo Available

442 NXV7733231
Name : Vishnu Dhondiram Kanade
Father's Name: Dhondiram Kanade
House Number : 733
Age : 61 Gender : Male
Photo Available

443 NXV7732175
Name : Sushilabai Vishnu Kanade
Husband's Name: Vishnu Kanade
House Number : 733
Age : 54 Gender : Female
Photo Available

444 NXV7733157
Name : Bai Vishnu Kanade
Husband's Name: Vishnu Kanade
House Number : 733
Age : 53 Gender : Female
Photo Available

445 NXV9317900
Name : AMRUTA KRUSHNA KANADE
Husband's Name: KRUSHNA KANADE
House Number : 733
Age : 33 Gender : Female
Photo Available

446 NXV4101283
Name : Vilanbai Nandkumar Naikvadi
Husband's Name: Nandkumar Naikvadi
House Number : 733
Age : 81 Gender : Female
Photo Available

447 KQJ1466242
Name : Bandu Kisan Khandekar
Father's Name: Kisan Khandekar
House Number : 734
Age : 60 Gender : Male
Photo Available

448 NXV7732183
Name : Sakhubai Bandu Khandekar
Husband's Name: Bandu Khandekar
House Number : 734
Age : 54 Gender : Female
Photo Available

449 NXV1578053
Name : Amola Bandu Khandekar
Father's Name: Bandu Khandekar
House Number : 734
Age : 36 Gender : Male
Photo Available

450 KQJ0745299
Name : Dagdu Rambhau Jagdale
Father's Name: Rambhau Jagdale
House Number : 737
Age : 59 Gender : Male
Photo Available

451 NXV7202708
Name : Sudamati Dagdu Jagdale
Husband's Name: Dagdu Jagdale
House Number : 737
Age : 54 Gender : Female
Photo Available

452 KQJ1466176
Name : Nana Kisan Devkate
Father's Name: Kisan Devkate
House Number : 739
Age : 48 Gender : Male
Photo Available

453 KQJ0711309
Name : Laxman Kisan Devkate
Father's Name: Kisan Devkate
House Number : 739
Age : 46 Gender : Male
Photo Available

454 KQJ0711242
Name : Sunita Nana Devkate
Husband's Name: Nana Devkate
House Number : 739
Age : 44 Gender : Female
Photo Available

455 NXV5033824
Name : ABHINAV MANE
Mother's Name: ALKA MANE
House Number : mane house
Age : 23 Gender : Male
Photo Available

456 KQJ0711325
Name : Meera Laxman Devkate
Husband's Name: Laxman Devkate
House Number : 739
Age : 42 Gender : Female
Photo Available

457 KQJ0744490
Name : Rama Kisan Devkate
Father's Name: Kisan Devkate
House Number : 739
Age : 40 Gender : Male
Photo Available

458 NXV7732191
Name : Surekha Shivaji Bhise
Husband's Name: Shivaji Bhise
House Number : 740
Age : 48 Gender : Female
Photo Available

459 KQJ0745000
Name : Rekha Sukhdev Dhombare
Husband's Name: Sukhdev Dhombare
House Number : 740
Age : 42 Gender : Female
Photo Available

460 KQJ1465939
Name : Santosh Nar Singh Dhombare
Father's Name: Nar Singh Dhombare
House Number : 740
Age : 42 Gender : Male
Photo Available

461 NXV7733074
Name : Sakharbai Nar Singh Thombare
Husband's Name: Nar Singh Thombare
House Number : 740
Age : 56 Gender : Female
Photo Available

462 KQJ0744946
Name : Sukhdev Nar Singh Thombare
Father's Name: Nar Singh Thombare
House Number : 740
Age : 49 Gender : Male
Photo Available

463 KQJ0743310
Name : Manubai Prabhu Botachate
Husband's Name: Prabhu Botachate
House Number : 741
Age : 68 Gender : Female
Photo Available

464 NXV1578061
Name : Tanaji Prabhu Botachate
Father's Name: Prabhu Botachate
House Number : 741
Age : 54 Gender : Male
Photo Available

465 NXV1578079
Name : Savita Tanaji Botachate
Husband's Name: Tanaji Botachate
House Number : 741
Age : 51 Gender : Female
Photo Available

466 NXV8406993
Name : KALAM SHAIKH
Father's Name: VAHAB SHEKH
House Number :
Age : 34 Gender : Male
Photo Available

467 KQJ0710087
Name : Sanjay Nagurav Kharat
Father's Name: Nagurav Kharat
House Number : 743
Age : 53 Gender : Male
Photo Available

468 KQJ0713206
Name : Mahadevi Sanjay Kharat
Husband's Name: Sanjay Kharat
House Number : 743
Age : 42 Gender : Female
Photo Available

469 NXV9387655
Name : RUSHIKESH KHARAT
Father's Name: SANJAY KHARAT
House Number : 743
Age : 26 Gender : Male
Photo Available

470 NXV7732209
Name : Subhash Shesherao Madane
Father's Name: Shesherao Madane
House Number : 744
Age : 65 Gender : Male
Photo Available

471 NXV7732217
Name : Indubai Subhash Madane
Husband's Name: Subhash Madane
House Number : 744
Age : 57 Gender : Female
Photo Available

472 NXV0013477
Name : Parvatibai Babu Madane
Husband's Name: Babu Madane
House Number : 745
Age : 64 Gender : Female
Photo Available

473 KQJ0744912
Name : Shivaji Babu Madane
Father's Name: Babu Madane
House Number : 745
Age : 49 Gender : Male
Photo Available

474 KQJ0710137
Name : Tanaji Babu Madane
Father's Name: Babu Madane
House Number : 745
Age : 47 Gender : Male
Photo Available

475 KQJ0745273
Name : Savitra Shivaji Madane
Husband's Name: Shivaji Madane
House Number : 745
Age : 41 Gender : Female
Photo Available

476 NXV5054903
Name : SAROJA APPASAHEB ASHTHEKAR ASHTEKAR
Father's Name: APPASAHEB ASHTEKAR
House Number : nursing ves
Age : 22 Gender : Female
Photo Available

477 KQJ1465863
Name : Deepak Gowardhan Salgar
Father's Name: Gowardhan Salgar
House Number : 745
Age : 56 Gender : Male
Photo Available

478 NXV7733173
Name : Janabai Prabhu Madane
Husband's Name: Prabhu Madane
House Number : 746
Age : 59 Gender : Female
Photo Available

479 NXV7732233
Name : Sojarbai Manik Madane
Husband's Name: Manik Madane
House Number : 747
Age : 79 Gender : Female
Photo Available

480 NXV0013497
Name : Bharat Manik Madane
Father's Name: Manik Madane
House Number : 747
Age : 53 Gender : Male
Photo Available

481 KQJ1466085
Name : Laxmi Bharat Madane
Husband's Name: Bharat Madane
House Number : 747
Age : 42 Gender : Female
Photo Available

482 NXV9320185
Name : DEVANAND BHARAT MADANE
Father's Name: BHARAT MADANE
House Number : 747
Age : 30 Gender : Male
Photo Available

483 KQJ1466499
Name : Parvatibai Laxman Madane
Husband's Name: Laxman Madane
House Number : 749
Age : 67 Gender : Female
Photo Available

484 KQJ1466382
Name : Shivaji Laxman Madane
Father's Name: Laxman Madane
House Number : 749
Age : 48 Gender : Male
Photo Available

485 KQJ0745992
Name : Tanaji Laxman Madane
Father's Name: Laxman Madane
House Number : 749
Age : 41 Gender : Male
Photo Available

486 NXV7733165
Name : Rukminabai Rambhau Madane
Husband's Name: Rambhau Madane
House Number : 750
Age : 79 Gender : Female
Photo Available

487 KQJ0710814
Name : Subhash Rambhau Madane
Father's Name: Rambhau Madane
House Number : 750
Age : 54 Gender : Male
Photo Available

488 KQJ0710822
Name : Sunita Subhash Madane
Husband's Name: Subhash Madane
House Number : 750
Age : 50 Gender : Female
Photo Available

489 KQJ0710111
Name : Bandu Rambhau Madane
Father's Name: Rambhau Madane
House Number : 750
Age : 47 Gender : Male
Photo Available

490 NXV7732837
Name : Usha Bandu Madane
Husband's Name: Bandu Madane
House Number : 750
Age : 42 Gender : Female
Photo Available

491 NXV7732241
Name : Khandu Rambhau Madane
Father's Name: Rambhau Madane
House Number : 750
Age : 42 Gender : Male
Photo Available

492 NXV7202724
Name : Abhiman Arjun Kokare
Father's Name: Arjun Kokare
House Number : 751
Age : 47 Gender : Male
Photo Available

493 NXV7732258
Name : Arjun Namdev Kokre
Father's Name: Namdev Kokre
House Number : 751
Age : 84 Gender : Male
Photo Available

494 NXV7732266
Name : Santubai Arjun Arjul Kokre
Husband's Name: Arjul Kokre
House Number : 751
Age : 79 Gender : Female
Photo Available

495 NXV7202716
Name : Biru Arjun Kokre
Father's Name: Arjun Kokre
House Number : 751
Age : 53 Gender : Male
Photo Available

496 NXV7202732
Name : Alka Biru Kokre
Husband's Name: Biru Kokre
House Number : 751
Age : 49 Gender : Female
Photo Available

497 KQJ0712174
Name : Amita Abhiman Kokre
Husband's Name: Abhiman Kokre
House Number : 751
Age : 40 Gender : Female
Photo Available

498 NXV4965059
Name : Balaji Pandit Kokare
Mother's Name: Banubai Pandit Kokare
House Number : 752
Age : 25 Gender : Male
Photo Available

499 NXV9874553
Name : TEJAS KOKARE
Father's Name: VITTHAL KOKARE
House Number : 752
Age : 24 Gender : Male
Photo Available

500 NXV0013516
Name : Janabai Ramaling Kokre
Husband's Name: Ramaling Kokre
House Number : 752
Age : 70 Gender : Female
Photo Available

501 NXV0013524
Name : Pandit Ramaling Kokre
Father's Name: Ramaling Kokre
House Number : 752
Age : 54 Gender : Male
Photo Available

502 NXV0013532
Name : Vitthal Ramaling Kokre
Father's Name: Ramaling Kokre
House Number : 752
Age : 50 Gender : Male
Photo Available

503 KQJ0710798
Name : Banubai Pandit Kokre
Husband's Name: Pandit Kokre
House Number : 752
Age : 42 Gender : Female
Photo Available

504 KQJ0710772
Name : Ashabai Vitthal Kokre
Husband's Name: Vitthal Kokre
House Number : 752
Age : 42 Gender : Female
Photo Available

505 NXV7202757
Name : Bhima Narayan Kokare
Father's Name: Narayan Kokare
House Number : 753
Age : 59 Gender : Male
Photo Available

506 NXV7202773
Name : Jayashri Bhima Kokare
Husband's Name: Bhima Kokare
House Number : 753
Age : 54 Gender : Female
Photo Available

507 NXV0013556
Name : Indubai Sambhaji Kokare
Husband's Name: Narayan Kokare
House Number : 753
Age : 52 Gender : Female
Photo Available

508 NXV0013576
Name : Jaibai Dagdu Shirgire
Husband's Name: Dagdu Shirgire
House Number : 754
Age : 79 Gender : Female
Photo Available

509 KQJ0744144
Name : Khandu shirgire
Father's Name: dagdu shirgire
House Number : 754
Age : 42 Gender : Male
Photo Available

510 KQJ0744276
Name : Baban Sham Rao Karanavar
Father's Name: Sham Rao Karanavar
House Number : 755
Age : 69 Gender : Male
Photo Available

511 KQJ0744292
Name : Suman Baban Karanavar
Husband's Name: Baban Karanavar
House Number : 755
Age : 65 Gender : Female
Photo Available

512 KQJ1467455
Name : Bharat Shripati Karanavar
Father's Name: Shripati Karanavar
House Number : 756
Age : 74 Gender : Male
Photo Available

513 KQJ0710434
Name : Kundalik Shripati Karanavar
Father's Name: Shripati Karanavar
House Number : 756
Age : 70 Gender : Male
Photo Available

514 KQJ1467414
Name : Rukminabai Bharat Karanavar
Husband's Name: Bharat Karanavar
House Number : 756
Age : 69 Gender : Female
Photo Available

515 NXV7732324
Name : Bajrang Shripati Karanavar
Father's Name: Shripati Karanavar
House Number : 756
Age : 65 Gender : Male
Photo Available

516 NXV8065724
Name : POOJA RAJAPUT
Father's Name: PRAKASHSINHA RAJAPUT
House Number :
Age : 33 Gender : Female
Photo Available

517 KQJ0711812
Name : Rambha Kundalik Karanavar
Husband's Name: Kundalik Karanavar
House Number : 756
Age : 64 Gender : Female
Photo Available

518 KQJ0742718
Name : Sachin Bharat Karanavar
Father's Name: Bharat Karanavar
House Number : 756
Age : 42 Gender : Male
Photo Available

519 NXV1578087
Name : Ramesh Bharat Karanavar
Father's Name: Bharat Karanavar
House Number : 756
Age : 37 Gender : Male
Photo Available

520 KQJ0742650
Name : Rannajit Shripati Karanavar
Father's Name: Shripati Karanavar
House Number : 758
Age : 53 Gender : Male
Photo Available

521 NXV8065757
Name : Pooja Shitalsing Chouhan
Husband's Name: Shitalsing Chouhan
House Number :
Age : 34 Gender : Female
Photo Available

522 NXV8407306
Name : Gopalsingh Vitthalsingh Chouhan
Father's Name: Vitthalsingh chouhan
House Number :
Age : 30 Gender : Male
Photo Available

523 KQJ0742643
Name : Shivnanda Rannajit Karanavar
Husband's Name: Ranjit Karanavar
House Number : 758
Age : 47 Gender : Female
Photo Available

524 KQJ1467463
Name : Vinayak Laxman Dhobale
Father's Name: Laxman Dhobale
House Number : 760
Age : 65 Gender : Male
Photo Available

525 NXV1578095
Name : Putlabai Vinayak Dhobale
Husband's Name: Vinayak Dhobale
House Number : 760
Age : 52 Gender : Female
Photo Available

526 KQJ0711366
Name : Bhujang Maruti Khandekar
Father's Name: Maruti Khandekar
House Number : 761
Age : 48 Gender : Male
Photo Available

527 NXV1588698
Name : Sidhdeshvar Vithatl Khandekar
Father's Name: Vithatl Khandekar
House Number : 761
Age : 38 Gender : Male
Photo Available

528 NXV3003860
Name : PRAKASHSING HANUMANSING RAJPUT
Father's Name: HANUMANSING RAJPUT
House Number : 667 2
Age : 77 Gender : Male
Photo Available

529 KQJ0745117
Name : Kashibai Ram Bandagar
Husband's Name: Ram Bandagar
House Number : 762
Age : 69 Gender : Female
Photo Available

530 NXV3004561
Name : SUNITA RAJAPUT
Father's Name: PRAKASHSING RAJAPUT
House Number : 667 2
Age : 56 Gender : Female
Photo Available

531 NXV7000359
Name : AKASHSINHA RAJAPUT
Father's Name: PRAKASHSINHA RAJAPUT
House Number : 667 2
Age : 35 Gender : Male
Photo Available

532 KQJ0744896
Name : Balaji Ram Bandagar
Father's Name: Ram Bandagar
House Number : 762
Age : 49 Gender : Male
Photo Available

533 KQJ0745125
Name : Sujata Balaji Bandagar
Husband's Name: Balaji Bandagar
House Number : 762
Age : 42 Gender : Female
Photo Available

534 NXV5113865
Name : SHIVAPRASAD ANKUSH RODAGE
Father's Name: ANKUSH MAHALING RODAGE
House Number : 669
Age : 21 Gender : Male
Photo Available

535 KQJ0713123
Name : Lata Kakasaheb Bandagar
Husband's Name: Kakasaheb Bandagar
House Number : 762
Age : 41 Gender : Female
Photo Available

536 NXV3003480
Name : Kakasaheb Ram Bandgar
Father's Name: Ram Bandagar
House Number : 762
Age : 42 Gender : Male
Photo Available

537 NXV9987165
Name : ganesh bandgar
Father's Name: balaji bandgar
House Number : 762
Age : 25 Gender : Male
Photo Available

538 NXV4964847
Name : Kiran Kakasaheb Bandgar
Mother's Name: Lata Kakasaheb Bandgar
House Number : 762
Age : 21 Gender : Male
Photo Available

539 KQJ1466432
Name : Saroj Gajanan Padhanre
Husband's Name: Gajanan Padhanre
House Number : 762
Age : 42 Gender : Female
Photo Available

540 NXV4965661
Name : Pratiksha Sachin Naikwadi
Husband's Name: Sachin Naikwadi
House Number : 763
Age : 25 Gender : Female
Photo Available

541 NXV7202815
Name : Yuvraj Baliram Thorat
Father's Name: Baliram Thorat
House Number : 763
Age : 49 Gender : Male
Photo Available

542 NXV7732357
Name : Sindhubai Yuvraj Thorat
Husband's Name: Yuvraj Thorat
House Number : 763
Age : 42 Gender : Female
Photo Available

543 KQJ0744987
Name : Navnath Baliram Thorat
Father's Name: Baliram Thorat
House Number : 763
Age : 42 Gender : Male
Photo Available

544 NXV9382383
Name : KALPANA THORAT
Husband's Name: NAVNATH THORAT
House Number : 763
Age : 38 Gender : Female
Photo Available

545 KQJ0710426
Name : Kamla Nagu Pandhare
Husband's Name: Nagu Pandhare
House Number : 764
Age : 61 Gender : Female
Photo Available

546 NXV5032131
Name : Dnyaneshwari Balasaheb Naikwadi
Father's Name: Balasaheb Ranganath Naikwadi
House Number : 685
Age : 21 Gender : Female
Photo Available

547 NXV3003829
Name : Suvarna Bhujang Khandekar
Husband's Name: Bhujang Khandekar
House Number : 765
Age : 42 Gender : Female
Photo Available

548 KQJ0710517
Name : Sunita Waman Shendage
Husband's Name: Waman Shendage
House Number : 765
Age : 42 Gender : Female
Photo Available

549 KQJ0713131
Name : Mahananda Dhulap Pa Pandhare
Husband's Name: Dhulap Pa Pandhare
House Number : 766
Age : 64 Gender : Female
Photo Available

550 KQJ0711259
Name : Satish Vitthal Thombare
Father's Name: Vitthal Thombare
House Number : 766
Age : 51 Gender : Male
Photo Available

551 KQJ0710483
Name : Neeta Dattu Thombare
Husband's Name: Dattu Thombare
House Number : 766 A
Age : 57 Gender : Female
Photo Available

552 NXV7732365
Name : Anna Dhulappa Padhanre
Father's Name: Dhulappa Padhanre
House Number : 766a
Age : 42 Gender : Male
Photo Available

553 NXV4942314
Name : Shreyas Vimalchandra Joshi
Father's Name: Vimalchand Joshi
House Number : 696
Age : 21 Gender : Male
Photo Available

554 KQJ0711762
Name : Indubai Ambdas Pandhare
Husband's Name: Ambadas Pandhare
House Number : 766a
Age : 79 Gender : Female
Photo Available

555 NXV0013623
Name : Tukaram Sudam Dhumal
Father's Name: Sudam Dhumal
House Number : 769
Age : 59 Gender : Male
Photo Available

556 NXV7202849
Name : Manubai Tukaram Dhumal
Husband's Name: Tukaram Dhumal
House Number : 769
Age : 56 Gender : Female
Photo Available

557 NXV7732399
Name : Balu Shankar Padule
Father's Name: Shankar Padule
House Number : 770
Age : 57 Gender : Male
Photo Available

558 KQJ0710244
Name : Jotirat Dasu Khating
Father's Name: Dasu Khating
House Number : 771
Age : 63 Gender : Male
Photo Available

559 KQJ0710236
Name : Meerabai Jyotiram Khating
Husband's Name: Jyotiram Khating
House Number : 771
Age : 60 Gender : Female
Photo Available

560 KQJ0710202
Name : Dat Tu Dasu Khating
Father's Name: Dasu Khating
House Number : 771
Age : 59 Gender : Male
Photo Available

561 KQJ0743302
Name : Surekha Dat Tu Khating
Husband's Name: Dat Tu Khating
House Number : 771
Age : 55 Gender : Female
Photo Available

562 KQJ0710921
Name : Shivling Shankar Hakare
Father's Name: Shankar Hakare
House Number : 773
Age : 50 Gender : Male
Photo Available

563 KQJ0745240
Name : Pushpa Shivling Hakare
Husband's Name: Shivling Hakare
House Number : 773
Age : 47 Gender : Female
Photo Available

564 KQJ0744540
Name : Dattu Murlidhar Bande
Father's Name: Murlidhar Bande
House Number : 774
Age : 43 Gender : Male
Photo Available

565 KQJ1466655
Name : Seema Dattu Bande
Husband's Name: Dattu Bande
House Number : 774
Age : 41 Gender : Female
Photo Available

566 NXV9387507
Name : NAYAN BANDE
Father's Name: DATTU BANDE
House Number : 774
Age : 27 Gender : Male
Photo Available

567 KQJ0742254
Name : Vilas Subhash Madane
Father's Name: Subhash Madane
House Number : 774
Age : 40 Gender : Male
Photo Available

568 NXV7202880
Name : Kaka Babu Bande
Father's Name: Babu Bande
House Number : 775
Age : 59 Gender : Male
Photo Available

569 NXV7202872
Name : Hari Babu Bande
Father's Name: Babu Bande
House Number : 775
Age : 56 Gender : Male
Photo Available

570 KQJ0743096
Name : Sat Yabhama Kaka Bande
Husband's Name: Kaka Bande
House Number : 775
Age : 54 Gender : Female
Photo Available

571 KQJ0744482
Name : Pavruti Hari Bande
Husband's Name: Hari Bande
House Number : 775
Age : 51 Gender : Female
Photo Available

572 NXV7000326
Name : Irppa Kaka Bande
Father's Name: Kaka Bande
House Number : 775
Age : 33 Gender : Male
Photo Available

573 KQJ0743054
Name : Savita Gurunath Bande
Husband's Name: Gurunath Bande
House Number : 777
Age : 51 Gender : Female
Photo Available

574 KQJ0742296
Name : Gurunath Baliram Bande
Father's Name: Baliram Bande
House Number : 777
Age : 49 Gender : Male
Photo Available

575 KQJ0741710
Name : Nana Baliram Bande
Father's Name: Baliram Bande
House Number : 777
Age : 49 Gender : Male
Photo Available

576 KQJ0742023
Name : Kavita Nana Bande
Husband's Name: Nana Bande
House Number : 777
Age : 42 Gender : Female
Photo Available

577 NXV9318023
Name : VISHAL GURUNATH BANDE
Father's Name: GURUNATH BANDE
House Number : 777
Age : 30 Gender : Male
Photo Available

578 NXV4720801
Name : BHAGYASHRI BANDE
Mother's Name: KAVITA BANDE
House Number : 777
Age : 24 Gender : Female
Photo Available

579 KQJ0710509
Name : Annapurna Tukaram Jankar
Husband's Name: Tukaram Jankar
House Number : 778
Age : 42 Gender : Female
Photo Available

580 NXV7202898
Name : Sitabai Harishchandra Kokare
Husband's Name: Harishchandra Kokare
House Number : 779
Age : 75 Gender : Female
Photo Available

581 NXV4797056
Name : Gorakhanath Tanaji Mane
Father's Name: Tanaji Mane
House Number : 780
Age : 33 Gender : Male
Photo Available

582 NXV4797759
Name : Ram Tanaji Mane
Father's Name: Tanaji Mane
House Number : 780
Age : 26 Gender : Male
Photo Available

583 NXV4797742
Name : Namrata Gorakshnath Mane
Husband's Name: Gorakshnath Mane
House Number : 780
Age : 25 Gender : Female
Photo Available

584 NXV1578129
Name : Limbraj Dhondiba Mane
Father's Name: Dhondiba Mane
House Number : 780
Age : 55 Gender : Male
Photo Available

585 KQJ0745646
Name : Tanaji Dhondiba Mane
Father's Name: Dhondiba Mane
House Number : 780
Age : 51 Gender : Male
Photo Available

586 KQJ0745885
Name : Mahananda Tanaji Mane
Husband's Name: Tanaji Mane
House Number : 780
Age : 42 Gender : Female
Photo Available

587 NXV1588755
Name : Sojarbai Nivrutti Kachre
Husband's Name: Nivrutti Kachre
House Number : 781
Age : 77 Gender : Female
Photo Available

588 NXV0013748
Name : Rangnath Nivrut T. Kachre
Father's Name: Nivrut T. Kachre
House Number : 781
Age : 65 Gender : Male
Photo Available

589 NXV7202914
Name : Hirabai Rangnath Kachre
Husband's Name: Rangnath Kachre
House Number : 781
Age : 62 Gender : Female
Photo Available

590 NXV1588714
Name : Raghunath Nivrutti Kachre
Father's Name: Nivrutti Kachre
House Number : 781
Age : 42 Gender : Male
Photo Available

591 NXV1588722
Name : Kusum Raghunath Kachre
Husband's Name: Raghunath Kachre
House Number : 781
Age : 42 Gender : Female
Photo Available

592 KQJ0745596
Name : Navnath Renganath Kachre
Father's Name: Renganath Kachre
House Number : 781
Age : 42 Gender : Male
Photo Available

593 NXV1588748
Name : Sandeep Raghunath Kachre
Father's Name: Raghunath Kachre
House Number : 781
Age : 38 Gender : Male
Photo Available

594 NXV7732464
Name : Bibhishan Bhimrao Andhale
Father's Name: Bhimrao Andhale
House Number : 782
Age : 57 Gender : Male
Photo Available

595 NXV7732456
Name : SUMAN BHASKAR ANDHALE
Husband's Name: BHASKAR ANDHALE
House Number : 782
Age : 58 Gender : Female
Photo Available

596 NXV7202922
Name : Chandrakant Bhimrao Andhale
Father's Name: Bhimrao Andhale
House Number : 782
Age : 53 Gender : Male
Photo Available

597 NXV7733090
Name : Sindhu Bibhishan Andhale
Husband's Name: Bibhishan Andhale
House Number : 782
Age : 53 Gender : Female
Photo Available

598 KQJ0745307
Name : Keshav Balwant Padhanre
Father's Name: Balwant Padhanre
House Number : 783
Age : 42 Gender : Male
Photo Available

599 NXV0013754
Name : Balwant Dagdu Pandhare
Father's Name: Dagdu Pandhare
House Number : 783
Age : 64 Gender : Male
Photo Available

600 NXV0013764
Name : Parvati Balwant Pandhare
Husband's Name: Balwant Pandhare
House Number : 783
Age : 60 Gender : Female
Photo Available

601 NXV3004348
Name : Achyut Balwant Pandhare
Father's Name: Balwant Pandhare
House Number : 783
Age : 36 Gender : Female
Photo Available

602 NXV7202971
Name : Aroon Laxman Dhobale
Father's Name: Laxman Dhobale
House Number : 784
Age : 59 Gender : Male
Photo Available

603 NXV7202989
Name : Suman Arun Dhobale
Husband's Name: Aroon Dhobale
House Number : 784
Age : 55 Gender : Female
Photo Available

604 NXV3004330
Name : Sharad Aroon Dhobale
Father's Name: Aroon Dhobale
House Number : 784
Age : 38 Gender : Male
Photo Available

605 NXV1588763
Name : Rameshvar Aroon Dhobale
Father's Name: Aroon Dhobale
House Number : 784
Age : 36 Gender : Male
Photo Available

606 KQJ0745786
Name : Ramdas Bhau Masal
Father's Name: Bhau Masal
House Number : 785
Age : 64 Gender : Male
Photo Available

607 NXV7202997
Name : Kamalbai Ramdas Masal
Husband's Name: Ramdas Masal
House Number : 785
Age : 61 Gender : Female
Photo Available

608 KQJ0743369
Name : Babu Ramdas Masal
Father's Name: Ramdas Masal
House Number : 785
Age : 42 Gender : Male
Photo Available

609 KQJ0743138
Name : Lata Ramdas Masal
Husband's Name: Ramdas Masal
House Number : 785
Age : 42 Gender : Female
Photo Available

610 NXV7732472
Name : Taramati Babu Takle
Husband's Name: Babu Takle
House Number : 787
Age : 66 Gender : Female
Photo Available

611 NXV7732480
Name : Bapu Babu Takle
Father's Name: Babu Takle
House Number : 787
Age : 42 Gender : Male
Photo Available

612 NXV1588730
Name : Pradip Kachare
Father's Name: Raghunath Kachre
House Number : 781
Age : 47 Gender : Male
Photo Available

613 NXV7202807
Name : Shivaji Shrimant Pandhare
Father's Name: Shrimant Pandhare
House Number : 789/k
Age : 39 Gender : Male
Photo Available

614 NXV7732563
Name : Sojarbai Dagdu Pandhare
Husband's Name: Dagdu Pandhare
House Number : 790
Age : 63 Gender : Female
Photo Available

615 NXV0013774
Name : V Yankat Dagdu Pandhare
Father's Name: Dagdu Pandhare
House Number : 790
Age : 57 Gender : Male
Photo Available

616 NXV7733108
Name : Sheshabai V Yankat Pandhare
Husband's Name: V Yankat Pandhare
House Number : 790
Age : 50 Gender : Female
Photo Available

617 NXV3004033
Name : Mahadev Vyankat Pandhare
Father's Name: Vyankat Pandhare
House Number : 790
Age : 37 Gender : Male
Photo Available

618 NXV0013794
Name : Dagdu Ambadas Kolekar
Father's Name: Ambadas Kolekar
House Number : 791
Age : 79 Gender : Male
Photo Available

619 NXV3004744
Name : Kalyan Dagdu Kolekar
Father's Name: Dagdu Kolekar
House Number : 791
Age : 42 Gender : Male
Photo Available

620 KQJ0744508
Name : Goroba Jaivanta Jankar
Father's Name: Jainvanta Jankar
House Number : 792
Age : 79 Gender : Male
Photo Available

621 NXV7203037
Name : Alkabai Vishwanath Jankar
Husband's Name: Vishwanath Jankar
House Number : 792
Age : 65 Gender : Female
Photo Available

622 KQJ1466697
Name : Premchand Vishwanath Jankar
Father's Name: Vishwanath Jankar
House Number : 792
Age : 42 Gender : Male
Photo Available

623 KQJ1466663
Name : Gunamala Premchand Jankar
Husband's Name: Premchand Jankar
House Number : 792
Age : 42 Gender : Female
Photo Available

624 KQJ1465996
Name : Khandu Vishwanath Jankar
Father's Name: Vishwanath Jankar
House Number : 792
Age : 42 Gender : Male
Photo Available

625 KQJ0743344
Name : Trishala Khandu Jankar
Husband's Name: Khandu Jankar
House Number : 792
Age : 42 Gender : Female
Photo Available

626 NXV1578152
Name : Datta Vishvanath Jankar
Father's Name: Vishvanath Jankar
House Number : 792
Age : 39 Gender : Male
Photo Available

627 NXV1578160
Name : Indrajeet Vishvanath Jankar
Father's Name: Vishvanath Jankar
House Number : 792
Age : 39 Gender : Male
Photo Available

628 NXV3003472
Name : Rajendra Laxman Kokre
Father's Name: Laxman Kokre
House Number : 793
Age : 53 Gender : Male
Photo Available

629 KQJ0710780
Name : Padmin Rajendra Kokre
Husband's Name: Rajendra Kokre
House Number : 793
Age : 42 Gender : Female
Photo Available

630 NXV4101127
Name : KISHORSING RAJAPUT
Father's Name: PRAKASHSING RAJAPUT
House Number : 803
Age : 36 Gender : Male
Photo Available

631 NXV7203045
Name : Rakmaji Vithoba Adake
Father's Name: Vithoba Adake
House Number : 794
Age : 42 Gender : Male
Photo Available

632 KQJ1466820
Name : Vishnu Vithoba Adge
Father's Name: Vithoba Adge
House Number : 794
Age : 42 Gender : Male
Photo Available

633 KQJ1466812
Name : Vaishali Vishnu Adge
Husband's Name: Vishnu Adge
House Number : 794
Age : 42 Gender : Female
Photo Available

634 KQJ0712778
Name : Vithoba Apparao Adge
Father's Name: Apparao Adge
House Number : 794
Age : 42 Gender : Male
Photo Available

635 KQJ0712448
Name : Savitra Vithoba Adge
Husband's Name: Vithoba Adge
House Number : 794
Age : 42 Gender : Female
Photo Available

636 NXV0013839
Name : Prabhu Ap Parav Adke
Father's Name: Ap Parav Adke
House Number : 794
Age : 65 Gender : Male
Photo Available

637 NXV7732571
Name : Vimal Prabhu Adke
Husband's Name: Prabhu Adke
House Number : 794
Age : 61 Gender : Female
Photo Available

638 KQJ1466309
Name : Sham Rao Prabhu Adke
Father's Name: Prabhu Adke
House Number : 794
Age : 43 Gender : Male
Photo Available

639 NXV7732589
Name : Shamal Sham Rao Adke
Husband's Name: Sham Rao Adke
House Number : 794
Age : 36 Gender : Female
Photo Available

640 NXV1588771
Name : Shrimant Subrav Ramagude
Father's Name: Subrav Ramagude
House Number : 798
Age : 61 Gender : Male
Photo Available

641 NXV0013863
Name : Shantabai Shrimant Ramagude
Husband's Name: Shrimmant Ramagude
House Number : 798
Age : 57 Gender : Female
Photo Available

642 NXV7732613
Name : Jeeja Babru Ramgude
Husband's Name: Babru Ramgude
House Number : 798
Age : 42 Gender : Female
Photo Available

643 NXV7732621
Name : Khandu Babru Ramgude
Father's Name: Babru Ramgude
House Number : 798
Age : 42 Gender : Male
Photo Available

644 NXV1588789
Name : Balaji Shrimant Ramgude
Father's Name: Shrimant Ramgude
House Number : 798
Age : 42 Gender : Male
Photo Available

645 NXV4727731
Name : PANDURANG RAMGUDE
Mother's Name: JIJABAI RAMGUDE
House Number : 798
Age : 42 Gender : Male
Photo Available

646 NXV4727863
Name : REKHA RAMGUDE
Others: JIJABAI RAMGUDE
House Number : 798
Age : 39 Gender : Female
Photo Available

647 NXV4101242
Name : Nitin Shrimant Ramgude
Father's Name: Shrimant Ramgude
House Number : 798
Age : 36 Gender : Male
Photo Available

648 NXV7732647
Name : Gangabai Manik Samrat
Husband's Name: Manik Samrat
House Number : 800
Age : 70 Gender : Female
Photo Available

649 KQJ0710319
Name : Umakant Manik Samrat
Father's Name: Manik Samrat
House Number : 800
Age : 42 Gender : Male
Photo Available

650 NXV7732654
Name : Subhash Geetaram Samrat
Father's Name: Geetaram Samrat
House Number : 801
Age : 65 Gender : Male
Photo Available

651 KQJ0710764
Name : Ruk Meen Subhash Samrat
Husband's Name: Subhash Samrat
House Number : 801
Age : 60 Gender : Female
Photo Available

652 KQJ0712430
Name : Santosh Subhash Samrat
Father's Name: Subhash Samrat
House Number : 801
Age : 42 Gender : Male
Photo Available

653 NXV7732670
Name : Bhamabai Kashinath Thorat
Husband's Name: Kashinath Thorat
House Number : 802
Age : 59 Gender : Female
Photo Available

654 NXV7732704
Name : Anita Bibhishan Mas K
Husband's Name: Bibhishan Mas K
House Number : 803
Age : 59 Gender : Female
Photo Available

655 NXV4101135
Name : Dhuluba Chandar Shirgire
Father's Name: Chandar Shirgire
House Number : 803
Age : 40 Gender : Male
Photo Available

656 NXV3004207
Name : Balaji Kashinath Thorat
Father's Name: Kashinath Thorat
House Number : 803
Age : 39 Gender : Male
Photo Available

657 KQJ0710830
Name : Goroba Ranba Kokre
Father's Name: Ranba Kokre
House Number : 805
Age : 64 Gender : Male
Photo Available

658 KQJ0710228
Name : Shardabai Goroba Kokre
Husband's Name: Goroba Kokre
House Number : 805
Age : 59 Gender : Female
Photo Available

659 KQJ0744441
Name : Balaji Goroba Kokre
Father's Name: Goroba Kokre
House Number : 805
Age : 42 Gender : Male
Photo Available

660 NXV4101143
Name : Balasaheb Vishnu Kanade
Father's Name: Vishnu Kande
House Number : 805
Age : 35 Gender : Male
Photo Available

661 NXV7203086
Name : Hanumant Shripati Adake
Father's Name: Shripati Adake
House Number : 806
Age : 64 Gender : Male
Photo Available

662 NXV7203060
Name : Satyabhama Balasaheb Adake
Husband's Name: Balasaheb Adake
House Number : 806
Age : 64 Gender : Female
Photo Available

663 NXV7203094
Name : Meenabai Hanumant Adake
Husband's Name: Hanumant Adake
House Number : 806
Age : 49 Gender : Female
Photo Available

664 NXV4101309
Name : Dhiraj Hanmant Adake
Father's Name: Hanmant Adake
House Number : 807
Age : 39 Gender : Male
Photo Available

665 KQJ0741645
Name : Rambhau Shripati Adke
Father's Name: Shripati Adke
House Number : 807
Age : 62 Gender : Male
Photo Available

666 KQJ0710210
Name : Sita Bai Rambhau Adke
Husband's Name: Rambhau Adke
House Number : 807
Age : 57 Gender : Female
Photo Available

667 KQJ0742866
Name : Rangnath Shripati Adke
Father's Name: Shripati Adke
House Number : 807
Age : 42 Gender : Male
Photo Available

668 KQJ0742882
Name : Gangabai Rangnath Adke
Husband's Name: Rangnath Adke
House Number : 807
Age : 42 Gender : Female
Photo Available

669 KQJ0710145
Name : Annasaheb Ramu Adke
Father's Name: Ramu Adke
House Number : 807
Age : 40 Gender : Male
Photo Available

670 NXV4101325
Name : Pruthvi Santosh Deshmukh
Husband's Name: Santosh Deshmukh
House Number : 807
Age : 42 Gender : Female
Photo Available

671 NXV9318098
Name : RADHA KRUSHNA EDKE
Husband's Name: KRUSHNA EDKE
House Number : 807
Age : 33 Gender : Female
Photo Available

672 NXV4101317
Name : Sangeeta Navnath Koli
Husband's Name: Navnath Koli
House Number : 807
Age : 36 Gender : Female
Photo Available

673 NXV4101168
Name : Suwarna Narendra Shelke
Husband's Name: Narendra Shelke
House Number : 808
Age : 43 Gender : Female
Photo Available

674 NXV9318874
Name : BALAJI MACHINDRA SURWASE
Father's Name: MACHINDRA SURWASE
House Number : 896
Age : 38 Gender : Male
Photo Available

675 KQJ0745455
Name : Kamalbai Haribhau Andhale
Husband's Name: Haribhau Andhale
House Number : 897
Age : 42 Gender : Female
Photo Available

676 KQJ1465905
Name : Prakash Haribhau Andhale
Father's Name: Haribhau Andhale
House Number : 897
Age : 42 Gender : Male
Photo Available

677 KQJ1465897
Name : Mahananda Prakash Andhale
Husband's Name: Prakash Andhale
House Number : 897
Age : 42 Gender : Female
Photo Available

678 NXV7732720
Name : Subhash Haribhau Andhale
Father's Name: Haribhau Andhale
House Number : 897
Age : 42 Gender : Male
Photo Available

679 KQJ0743294
Name : Indubai Subhash Andhale
Husband's Name: Subhash Andhale
House Number : 897
Age : 42 Gender : Female
Photo Available

680 NXV9984170
Name : ASHWINI GAYKWAD
Husband's Name: RAHUL GAYKWAD
House Number : 903
Age : 37 Gender : Female
Photo Available

681 KQJ0712364
Name : Bibhishan Santram Kachre
Father's Name: Santram Kachre
House Number : 908
Age : 42 Gender : Male
Photo Available

682 KQJ0712356
Name : Radha Bai Bibhishan Kachre
Husband's Name: Bibhishan Kachre
House Number : 908
Age : 42 Gender : Female
Photo Available

683 KQJ0741850
Name : Singu Shankar Padulakar
Father's Name: Shankar Padulakar
House Number : 910
Age : 42 Gender : Male
Photo Available

684 NXV7732746
Name : Ratan Singu Padulakar
Father's Name: Singu Padulakar
House Number : 910
Age : 42 Gender : Male
Photo Available

685 NXV4942207
Name : Ankita Anand Thombare
Husband's Name: Anand Thombare
House Number : 913 A
Age : 21 Gender : Female
Photo Available

686 NXV4942280
Name : Vaishnavi Navnath Thombare
Husband's Name: Navnath Thombare
House Number : 913 B
Age : 25 Gender : Female
Photo Available

687 NXV7731938
Name : Sheshabai Sopan Ramgude
Husband's Name: Sopan Ramgude
House Number : 917
Age : 42 Gender : Female
Photo Available

688 KQJ0710046
Name : Tanaji Limbaji Mane
Father's Name: Limbaji Mane
House Number : 921
Age : 46 Gender : Male
Photo Available

689 NXV4964748
Name : Mayuri Raju Aawad
Husband's Name: Raju Aawad
House Number : 921 A
Age : 27 Gender : Female
Photo Available

690 KQJ0710129
Name : Nandkumar Limbaji Mane
Father's Name: Limbaji Mane
House Number : 923
Age : 44 Gender : Male
Photo Available

691 KQJ0743492
Name : Lyakatabi Hameed Kabir
Husband's Name: Hameed Kabir
House Number : 926
Age : 86 Gender : Female
Photo Available

692 NXV4942298
Name : Pallavi Kundan Maske
Husband's Name: Kundan Bibhishan Maske
House Number : 990 B
Age : 23 Gender : Female
Photo Available

693 NXV4942439
Name : Mukta Jivan Ghutukade
Husband's Name: Jivan Ghutukade
House Number : 990a
Age : 22 Gender : Female
Photo Available

694 KQJ0743468
Name : Putla Mahadev Padule
Father's Name: Mahadev Padule
House Number : 992
Age : 82 Gender : Female
Photo Available

695 NXV9892290
Name : AMRUTA NAIKWADI
Husband's Name: SUHAS NAIKWADI
House Number : 1377
Age : 27 Gender : Female
Photo Available

696 NXV9384280
Name : PANDURANG LOMATE
Father's Name: BHANUDAS LOMATE
House Number : 1518
Age : 41 Gender : Male
Photo Available

697 NXV4811790
Name : Namdev Vishvambhar Kasbe
Father's Name: Vishvambhar Kasbe
House Number : 1545
Age : 43 Gender : Male
Photo Available

698 NXV4769493
Name : Dhupekar Dattatray Siddheshwar
Father's Name: Dhupekar Siddheshwar
House Number : 339/1
Age : 25 Gender : Male
Photo Available

699 NXV1588409
Name : Sunil Jaivantarav Kolpe
Father's Name: Jaivantarav Kolpe
House Number : 652/1
Age : 37 Gender : Male
Photo Available

700 NXV3004777
Name : Sharda Chhan Nusing Rajput
Husband's Name: Chhan Nusing Rajput
House Number : 667 1
Age : 59 Gender : Female
Photo Available

701 NXV3004157
Name : Mahesh Singh Chhanusing RAJPUT
Father's Name: Chhanusing Chauhan
House Number : 667/1
Age : 37 Gender : Male
Photo Available

702 NXV9984196
Name : CAITANYAA RAJPUT
Husband's Name: MAHESHSING RAJPUT
House Number : 667/1
Age : 28 Gender : Female
Photo Available

703 NXV7202500
Name : Channusing Hanumansingh Rajput
Father's Name: Hanumansingh Rajput
House Number : 667-1
Age : 70 Gender : Male
Photo Available

704 NXV9318197
Name : PALLAVI GANESHSINGH RAJPUT
Husband's Name: GANESHSINGH RAJPUT
House Number : 667-1
Age : 30 Gender : Female
Photo Available

705 NXV3004017
Name : Vijay Singh Hanuman Singh Rajput
Father's Name: Hanumasing Rajput
House Number : 667 3
Age : 54 Gender : Male
Photo Available

706 NXV0891705
Name : Janakadevi Vijay Singh Rajput
Husband's Name: Vijay Singh Rajput
House Number : 667 3
Age : 49 Gender : Female
Photo Available

707 KQJ1466341
Name : Yaqub Latif Kabir
Father's Name: Yaqub Kabir
House Number : 672 1
Age : 59 Gender : Male
Photo Available

708 KQJ1466275
Name : Jubedabi Yaqub Kabir
Husband's Name: Yaqub Kabir
House Number : 672 1
Age : 54 Gender : Female
Photo Available

709 KQJ1466564
Name : A. Rahim Yaqub Kabir
Father's Name: Yaqub Kabir
House Number : 672 1
Age : 40 Gender : Male
Photo Available

710 NXV1588425
Name : Kareem Yaqub Qadir
Father's Name: Yaqub Qadir
House Number : 672/1
Age : 35 Gender : Male
Photo Available

711 KQJ0745745
Name : Shivashankar Basaling Kanade
Father's Name: Basaling Kanade
House Number : 678 1
Age : 53 Gender : Male
Photo Available

712 NXV9809575
Name : Vimal Basling Kande
Husband's Name: Basling Kande
House Number : 678 1
Age : 90 Gender : Female
Photo Available

713 NXV0013150
Name : Vishwanath Dhondiram Ingle
Father's Name: Dhondiram Ingle
House Number : 682 1
Age : 61 Gender : Male
Photo Available

714 NXV0013160
Name : Pushpa Vishwanath Ingle
Husband's Name: Vishwanath Ingle
House Number : 682 1
Age : 54 Gender : Female
Photo Available

715 NXV1588482
Name : Shivaji Dhondiram Ingle
Father's Name: Shivaji Ingle
House Number : 682 2
Age : 56 Gender : Male
Photo Available

716 NXV1588490
Name : Sunita Shivaji Ingle
Husband's Name: Shivaji Ingle
House Number : 682 2
Age : 52 Gender : Female
Photo Available

717 NXV0013180
Name : Ut Tam Mahaling Sakhare
Father's Name: Mahaling Sakhare
House Number : 683 1
Age : 64 Gender : Male
Photo Available

718 NXV0013190
Name : Lata Ut Tam Sakhare
Husband's Name: Ut Tam Sakhare
House Number : 683 1
Age : 59 Gender : Female
Photo Available

719 KQJ0742833
Name : Dhananjay Uttam Sakhare
Father's Name: Uttam Sakhare
House Number : 683 1
Age : 45 Gender : Male
Photo Available

720 NXV3003571
Name : Vasant Rangnath Naikvadi
Father's Name: Rangnath Naikvadi
House Number : 685 1
Age : 72 Gender : Male
Photo Available

721 NXV3004942
Name : Sumanbai Vasant Naikvadi
Husband's Name: Vasant Naikvadi
House Number : 685 1
Age : 67 Gender : Female
Photo Available

722 NXV7733314
Name : OMprkashr Vasant Naikvadi
Father's Name: Vasant Naikvadi
House Number : 685 1
Age : 44 Gender : Male
Photo Available

723 KQJ0713024
Name : Mahesh Vasant Naikvadi
Father's Name: Vasant Naikvadi
House Number : 685 1
Age : 42 Gender : Male
Photo Available

724 NXV1577857
Name : Bharat Rangnath Naikvadi
Father's Name: Rangnath Naikvadi
House Number : 685 2
Age : 63 Gender : Male
Photo Available

725 NXV1577865
Name : Savitabai Bharat Naikvadi
Husband's Name: Bharat Naikvadi
House Number : 685 2
Age : 58 Gender : Female
Photo Available

726 NXV3003555
Name : Balasaheb Rangnath Naikvadi
Father's Name: Rangnath Naikvadi
House Number : 685 3
Age : 50 Gender : Male
Photo Available

727 NXV1588508
Name : Manoj Uttam Sakhare
Father's Name: Uttam Sakhare
House Number : 686/1
Age : 38 Gender : Male
Photo Available

728 KQJ0164137
Name : Samb Sadashiv Shiral
Father's Name: Sadashiv Shiral
House Number : 689 1
Age : 61 Gender : Male
Photo Available

729 KQJ0713271
Name : Vijayabai Samb Shiral
Husband's Name: Samb Shiral
House Number : 689 1
Age : 59 Gender : Female
Photo Available

730 KQJ0745588
Name : Virbhadra Dhondiram Shiral
Father's Name: Dhondiram Shiral
House Number : 691 1
Age : 57 Gender : Male
Photo Available

731 NXV8163644
Name : Chitrabai Virbhadra Shiral
Husband's Name: Virbhadra Shiral
House Number : 691 1
Age : 52 Gender : Female
Photo Available

732 NXV1588847
Name : Sujata Virbhadra Shiral
Father's Name: Virbhadra Shiral
House Number : 691/1
Age : 36 Gender : Female
Photo Available

733 NXV7202559
Name : Maharudr Dhondiram Shiral
Father's Name: Dhondiram Shiral
House Number : 691-1
Age : 54 Gender : Male
Photo Available

734 NXV7731961
Name : Swati Laxmikant V Yas
Father's Name: Laxmikant V Yas
House Number : 695 1
Age : 64 Gender : Male
Photo Available

735 KQJ0742114
Name : Nilesh Laxmikant Vyas
Father's Name: Laxmikant Vyas
House Number : 695 1
Age : 44 Gender : Male
Photo Available

736 NXV7202567
Name : Sunil Shantanurao Vyas
Father's Name: Shantanurao Vyas
House Number : 695-2
Age : 63 Gender : Male
Photo Available

737 KQJ0743567
Name : Shivkanya Anil Lokhande
Husband's Name: Anil Lokhande
House Number : 699 1
Age : 45 Gender : Female
Photo Available

738 KQJ0744383
Name : Anil Dagdu Shette
Father's Name: Dagdu Shette
House Number : 699 1
Age : 59 Gender : Male
Photo Available

739 KQJ0744391
Name : Usha Anil Shette
Husband's Name: Anil Shette
House Number : 699 1
Age : 54 Gender : Female
Photo Available

740 NXV0013279
Name : Anil Murlidhar Lokhande
Father's Name: Murlidhar Lokhande
House Number : 699-1
Age : 47 Gender : Male
Photo Available

741 NXV7732977
Name : Shardabai Subhash Koli
Husband's Name: Subhash Koli
House Number : 703 2
Age : 54 Gender : Female
Photo Available

742 KQJ0745372
Name : Manubai Phoolchand Koli
Husband's Name: Phoolchand Koli
House Number : 703 3
Age : 56 Gender : Female
Photo Available

743 NXV1577923
Name : Ram Phoolchand Koli
Father's Name: Phoolchand Koli
House Number : 703/3
Age : 41 Gender : Male
Photo Available

744 NXV7202583
Name : Phoolchand Pralhad Koli
Father's Name: Pralhad Koli
House Number : 703-3
Age : 65 Gender : Male
Photo Available

745 KQJ0743591
Name : Sangitabai Bhalchandra Koli
Husband's Name: Bhalchandra Koli
House Number : 703 4
Age : 49 Gender : Female
Photo Available

746 NXV7202591
Name : Bhalchandra Pralhad Koli
Father's Name: Pralhad Koli
House Number : 703-4
Age : 54 Gender : Male
Photo Available

747 KQJ0745562
Name : Kisan Bhimrao Shelke
Father's Name: Bhimrao Shelke
House Number : 708 1
Age : 67 Gender : Male
Photo Available

748 NXV7732001
Name : Mahananda Kisan Shelke
Husband's Name: Kisan Shelke
House Number : 708 1
Age : 61 Gender : Female
Photo Available

749 KQJ0711184
Name : Ravindra Kisan Shelke
Father's Name: Kisan Shelke
House Number : 708 1
Age : 40 Gender : Male
Photo Available

750 NXV1577931
Name : Manik Rao Bhimrao Shelke
Father's Name: Bhimrao Shelke
House Number : 708 2
Age : 61 Gender : Male
Photo Available

751 NXV1577949
Name : Sukshala Manik Rao Shelke
Husband's Name: Manik Rao Shelke
House Number : 708 2
Age : 54 Gender : Female
Photo Available

752 KQJ0745224
Name : Hirakanabai Pandurang Shelke
Husband's Name: Pandurang Shelke
House Number : 708 3
Age : 59 Gender : Female
Photo Available

753 NXV7732928
Name : Mohrabai Subrav Shelke
Husband's Name: Subrav Shelke
House Number : 709 1
Age : 79 Gender : Female
Photo Available

754 NXV1577956
Name : Laxman Subrav Shelke
Father's Name: Subrav Shelke
House Number : 709 1
Age : 54 Gender : Male
Photo Available

755 NXV0013368
Name : Jayashri Laxman Shelke
Husband's Name: Laxman Shelke
House Number : 709 1
Age : 50 Gender : Female
Photo Available

756 NXV1577964
Name : Baliram Subrav Shelke
Father's Name: Subrav Shelke
House Number : 709 2
Age : 59 Gender : Male
Photo Available

757 NXV1577972
Name : Jeejabai Baliram Shelke
Husband's Name: Baliram Shelke
House Number : 709 2
Age : 54 Gender : Female
Photo Available

758 KQJ0743872
Name : Gangadhar Baliram Shelke
Father's Name: Baliram Shelke
House Number : 709 2
Age : 44 Gender : Male
Photo Available

759 NXV1588565
Name : At Maram Subrav Shelke
Father's Name: Subrav Shelke
House Number : 709 3
Age : 54 Gender : Male
Photo Available

760 NXV1588573
Name : Shardabai At Maram Shelke
Husband's Name: At Maram Shelke
House Number : 709 3
Age : 50 Gender : Female
Photo Available

761 NXV1588615
Name : Khandu Dnyanoba Padunle
Father's Name: Dnyanoba Padunle
House Number : 728 1
Age : 61 Gender : Male
Photo Available

762 NXV1588623
Name : Jayabai Khandu Padunle
Husband's Name: Khandu Padunle
House Number : 728 1
Age : 55 Gender : Female
Photo Available

763 NXV7732282
Name : Gaurakh Narayan Kokre
Father's Name: Narayan Kokre
House Number : 753 1
Age : 55 Gender : Male
Photo Available

764 KQJ0711267
Name : Rajendra Narayan Kokre
Father's Name: Narayan Kokre
House Number : 753 1
Age : 52 Gender : Male
Photo Available

765 NXV7732290
Name : Muktabai Gaurakh Kokre
Husband's Name: Gaurakh Kokre
House Number : 753 1
Age : 52 Gender : Female
Photo Available

766 NXV7732308
Name : Vandana Rajendra Kokre
Husband's Name: Rajendra Kokre
House Number : 753 1
Age : 50 Gender : Female
Photo Available

767 NXV1588664
Name : Shesherao Sham Rao Karanavar
Father's Name: Sham Rao Karanavar
House Number : 755 1
Age : 57 Gender : Male
Photo Available

768 NXV7732316
Name : Gangubai Sheshrao Karanavar
Husband's Name: Sheshrao Karanavar
House Number : 755 1
Age : 54 Gender : Female
Photo Available

769 KQJ1465772
Name : Akrur Laxman Dhobale
Father's Name: Laxman Dhobale
House Number : 767 1
Age : 65 Gender : Male
Photo Available

770 KQJ0712315
Name : Parvatibai Akrur Dhobale
Husband's Name: Akrur Dhobale
House Number : 767 1
Age : 61 Gender : Female
Photo Available

771 KQJ1465822
Name : Navnath Akrur Dhobale
Father's Name: Akrur Dhobale
House Number : 767 1
Age : 40 Gender : Male
Photo Available

772 NXV7732373
Name : Babu Sudam Dhumal
Father's Name: Sudam Dhumal
House Number : 769 1
Age : 72 Gender : Male
Photo Available

773 KQJ0710038
Name : Balaji Babu Dhumal
Father's Name: Babu Dhumal
House Number : 769 1
Age : 47 Gender : Male
Photo Available

774 KQJ0710657
Name : Sunanda Balaji Dhumal
Husband's Name: Balaji Dhumal
House Number : 769 1
Age : 42 Gender : Female
Photo Available

775 KQJ0712158
Name : Sugandha Gorola Dhumal
Husband's Name: Gorola Dhumal
House Number : 769 1
Age : 42 Gender : Female
Photo Available

776 NXV7202856
Name : Laxmi Babu Dhumal
Husband's Name: Babu Dhumal
House Number : 769-1
Age : 69 Gender : Female
Photo Available

777 NXV7732423
Name : Annasaheb Shankar Hankare
Father's Name: Shankar Hakare
House Number : 773 1
Age : 56 Gender : Male
Photo Available

778 NXV7732431
Name : Chhayabai Annasaheb Hakare
Husband's Name: Annasaheb Hakare
House Number : 773 1
Age : 52 Gender : Female
Photo Available

779 KQJ0710095
Name : Khandu Murlidhar Bande
Father's Name: Murlidhar Bande
House Number : 774 1
Age : 78 Gender : Male
Photo Available

780 KQJ0710061
Name : Sushilabai Khandu Bande
Husband's Name: Khandu Bande
House Number : 774 1
Age : 56 Gender : Female
Photo Available

781 KQJ0712307
Name : Pandurang Murlidhar Bande
Father's Name: Murlidhar Bande
House Number : 774 2
Age : 57 Gender : Male
Photo Available

782 KQJ0713388
Name : Meerabai Pandurang Bande
Husband's Name: Pandurang Bande
House Number : 774 2
Age : 54 Gender : Female
Photo Available

783 KQJ0710301
Name : Maruti Murlidhar Bande
Father's Name: Murlidhar Bande
House Number : 774 3
Age : 56 Gender : Male
Photo Available

784 KQJ0744458
Name : Kas Turabai Maruti Bande
Husband's Name: Maruti Bande
House Number : 774 3
Age : 48 Gender : Female
Photo Available

785 NXV9411380
Name : usha BANDE
Father's Name: MARUTI BANDE
House Number : 774-3
Age : 29 Gender : Female
Photo Available

786 KQJ0710277
Name : Dnyanoba Murlidhar Bande
Father's Name: Murlidhar Bande
House Number : 774 4
Age : 48 Gender : Male
Photo Available

787 KQJ0710582
Name : Ramaling Murlidhar Bande
Father's Name: Murlidhar Bande
House Number : 777 4
Age : 42 Gender : Male
Photo Available

788 KQJ0711176
Name : Vikas Agatarao Padhanre
Father's Name: Agatarao Padhanre
House Number : 779 5
Age : 42 Gender : Male
Photo Available

789 KQJ0745984
Name : Balaji Shrimant Padhanre
Father's Name: Shrimant Padhanre
House Number : 779 5
Age : 42 Gender : Male
Photo Available

790 KQJ0744771
Name : Tanaji Phoolchand Padhanre
Father's Name: Phoolchand Padhanre
House Number : 779 5
Age : 42 Gender : Male
Photo Available

791 NXV3004082
Name : Sachin Agatrao Pandhare
Father's Name: Agatrao Pandhare
House Number : 779/5
Age : 39 Gender : Male
Photo Available

792 NXV7732506
Name : Gayabai Limbaji Pandhare
Husband's Name: Limbaji Pandhare
House Number : 789 1
Age : 69 Gender : Female
Photo Available

793 NXV7203003
Name : Limbaji Bhagwan Pandhare
Father's Name: Bhagwan Pandhare
House Number : 789-1
Age : 74 Gender : Male
Photo Available

794 NXV7732522
Name : Shrimant Bhagwan Pandhare
Father's Name: Bhagwan Pandhare
House Number : 789 3
Age : 64 Gender : Male
Photo Available

795 NXV7732530
Name : Kaushal Ya Shrimant Pandhare
Husband's Name: Shrimant Pandhare
House Number : 789 3
Age : 59 Gender : Female
Photo Available

796 NXV7732548
Name : Phoolchand Bhagwan Pandhare
Father's Name: Bhagwan Pandhare
House Number : 789 4
Age : 59 Gender : Male
Photo Available

797 NXV7733199
Name : Shantabai Phoolchand Pandhare
Husband's Name: Phoolchand Pandhare
House Number : 789 4
Age : 54 Gender : Female
Photo Available

798 NXV7203011
Name : Dhanaji Fulachand Pandhare
Father's Name: Fulachand Pandhare
House Number : 789/4
Age : 38 Gender : Male
Photo Available

799 NXV7732555
Name : Sumanbai Harish Chandra Pandhare
Husband's Name: Harish Chandra Pandhare
House Number : 789 5
Age : 49 Gender : Female
Photo Available

800 NXV7203029
Name : Harishchandra Bhagwan Pandhare
Father's Name: Bhagwan Pandhare
House Number : 789-5
Age : 54 Gender : Male
Photo Available

801 NXV7732712
Name : Manabi Rof Maniyar
Husband's Name: Rof Maniyar
House Number : 809 2
Age : 58 Gender : Female
Photo Available

802 KQJ0745729
Name : Rof Hasan Maniyar
Father's Name: Hasan Maniyar
House Number : 809 2
Age : 54 Gender : Male
Photo Available

803 NXV7203102
Name : Javed Ahmed A. Rauf Maniyar
Father's Name: A. Rauf Maniyar
House Number : 809/2
Age : 37 Gender : Male
Photo Available

804 KQJ0745497
Name : Haneefa Hasanamiyo Maniyar
Husband's Name: Hasanamiyo Maniyar
House Number : 809 3
Age : 79 Gender : Female
Photo Available

805 KQJ0743476
Name : Ab Dulgani Hasanamiyo Maniyar
Father's Name: Hasanamiyo Maniyar
House Number : 809 3
Age : 59 Gender : Male
Photo Available

806 KQJ0712919
Name : Inayan A. Gani Maniyar
Father's Name: A.gani Maniyar
House Number : 809 3
Age : 42 Gender : Male
Photo Available

807 NXV1588797
Name : Azara Abdul Inayat Maniyar
Husband's Name: Abdul Inayat Maniyar
House Number : 879/3
Age : 37 Gender : Female
Photo Available

808 NXV7732753
Name : Rajendra Dhondiram Shiral
Father's Name: Dhondiram Shiral
House Number : 991 1
Age : 51 Gender : Male
Photo Available

809 KQJ1466606
Name : Bhalchandra Dhondiram Shiral
Father's Name: Dhondiram Shiral
House Number : 991 1
Age : 49 Gender : Male
Photo Available

810 KQJ1466291
Name : Jaydevi Maharudra Shiral
Husband's Name: Maharudra Shiral
House Number : 991 1
Age : 48 Gender : Female
Photo Available

811 KQJ1466440
Name : Mahadevi Rajendra Shiral
Husband's Name: Rajendra Shiral
House Number : 991 1
Age : 46 Gender : Female
Photo Available

812 NXV5177720
Name : ASHWINI VITTHALSINGH CHOUHAN
Father's Name: VITTHALSINGH CHOUHAN
House Number : 1
Age : 25 Gender : Female
Photo Available

813 NXV5179981
Name : Pooja Sharad Dhobale
Husband's Name: Sharad Dhobale
House Number : 784
Age : 33 Gender : Female
Photo Available

814 AVB7982481
Name : SANIKA RAHUL JADHAV
Husband's Name: RAHUL JADHAV
House Number : NEAR TRIVIKRAM MANDIR
Age : 23 Gender : Female
Photo Available

815 AVB6593800
Name : Rahul Dilip Jadhav
Father's Name: Dilip Jadhav
House Number : NEAR TRIVIKRAM MANDIR
Age : 33 Gender : Male
Photo Available

816 NXV5180633
Name : SONI SHANKAR PAWAR
Husband's Name: SHANKAR PAWAR
House Number : PARADHI GALLI
Age : 32 Gender : Female
Photo Available

817 NXV5180757
Name : DIVYA RAM MANE
Husband's Name: RAM MANE
House Number : PETH
Age : 21 Gender : Female
Photo Available

818 NXV5181607
Name : vaishnavi sachin todakari
Husband's Name: sachin mohan todakari
House Number : 228
Age : 27 Gender : Female
Photo Available

819 NXV5181904
Name : VIJAY SHIVPRASAD KANADE
Father's Name: SHIVPRASAD KANADE
House Number : AT POST TER
Age : 27 Gender : Male
Photo Available

820 NXV5182365
Name : sudarshna Balaji shinde
Husband's Name: Balaji Tanaji shinde
House Number : 31
Age : 29 Gender : Female
Photo Available

821 NXV5182373
Name : shahaji Tanaji shinde
Father's Name: Tanaji Kisan shinde
House Number : 30
Age : 26 Gender : Male
Photo Available

822 NXV5184288
Name : JYOTI KANTU PAWAR
Husband's Name: KANTU PAWAR
House Number : 12
Age : 26 Gender : Female
Photo Available

823 NXV5185277
Name : VEDANT Somani
Father's Name: MANISHKUMAR SOMANI
House Number : Building
Age : 20 Gender : Male
Photo Available

824 KQJ0712422
Name : Anita Arjun Kale
Husband's Name: Arjun Kale
House Number : a12
Age : 45 Gender : Female
Photo Available

825 KQJ0712232
Name : Arjun Laxman Kale
Father's Name: Laxman Kale
House Number : A12
Age : 66 Gender : Male
Photo Available

826 NXV4730859
Name : AJIT BHATBHAGE
Father's Name: ANANT BHATBHAGE
House Number : 548
Age : 27 Gender : Male
Photo Available

827 NXV1751866
Name : Pranita Kalidas Bhatbhage
Father's Name: Kalidas Devidas Bhatbhage
House Number : 548
Age : 39 Gender : Female
Photo Available

828 NXV4730461
Name : PRATHMESH GADE
Father's Name: SUDHAKAR GADE
House Number : 609
Age : 24 Gender : Male
Photo Available

829 NXV5193719
Name : Prerna Annasaheb Hankare
Others: Annasaheb Hankare
House Number : Ter
Age : 25 Gender : Female
Photo Available

830 NXV5193875
Name : Jagjitsinh Shivling Hankare
Others: Shivling Hankare
House Number : Ter
Age : 27 Gender : Male
Photo Available

831 NXV5194048
Name : Saraswati Jagjitsinh Hankare
Others: Jagjitsinh Hankare
House Number : Ter
Age : 23 Gender : Female
Photo Available

832 NXV9407222
Name : sahil mulani
Father's Name: nashuali mulani
House Number : 1560
Age : 25 Gender : Male
Photo Available

833 NXV5196126
Name : Anita Satish Rohidas
Husband's Name: Satish Baliram Rohidas
House Number : 520
Age : 33 Gender : Female
Photo Available

834 NXV5197694
Name : DIVYA CHOUGULE
Husband's Name: HARSHAL CHOUGULE
House Number : 02
Age : 29 Gender : Female
Photo Available

835 NXV5208939
Name : Indu Tanaji Pandhare
Husband's Name: Tanaji Fulchand Pandhare
House Number : 779,Ter
Age : 32 Gender : Female
Photo Available

836 NXV5217195
Name : ONKAR ANDHALE
Father's Name: SUBHASH ANDHALE
House Number : At Peth (Godavari)
Age : 25 Gender : Male
Photo Available

837 NXV5219936
Name : Vijay Khandu Janakar
Father's Name: Khandu Janakar
House Number : Godavari Galli
Age : 21 Gender : Male
Photo Available

838 NXV5229786
Name : PRAJAKTA SHINDE
Father's Name: VIKAS SHINDE
House Number : main.road.ter
Age : 32 Gender : Female
Photo Available

839 NXV5247507
Name : Samruddhi Abhishek Khandekar
Husband's Name: Abhishek Khandekar
House Number : C/O Abhishek Khandekar
Age : 26 Gender : Female
Photo Available

840 NXV5255609
Name : Shital Jitendra Pawar
Husband's Name: Jitendra Pawar
House Number : At Ter
Age : 31 Gender : Female
Photo Available

841 NXV5258561
Name : Padmini Khandagale
Mother's Name: Komal Khandagle
House Number : Khandagle Nivas
Age : 20 Gender : Female
Photo Available

842 NXV5263942
Name : BANABAI SUDAM PAWAR
Father's Name: SUDAM PAWAR
House Number : 0
Age : 23 Gender : Male
Photo Available

843 NXV5272380
Name : MOHAN TUKARAM JANKAR
Father's Name: TUKARAM VISHWANATH JANKAR
House Number : JANKAR NIWAS
Age : 20 Gender : Male
Photo Available

844 NXV5294210
Name : LALA RAJABHAU PAWAR
Father's Name: RAJABHAU PAWAR
House Number : PARDHI GALLI
Age : 25 Gender : Male
Photo Available

845 NXV5294475
Name : NANDINI RANJITSINGH CHAUHAN
Father's Name: RANJISINGH MOTISINGH CHAUHAN
House Number : main road, Ter
Age : 21 Gender : Female
Photo Available

846 NXV5294822
Name : BHAU DNYANOBA BANDE
Father's Name: DNYANOBA MURLIDHAR BANDE
House Number : At post peth Godavari
Age : 23 Gender : Male
Photo Available

847 NXV5297502
Name : Rajnandini Dinesh Madane
Husband's Name: Dinesh Bhaarat Madane
House Number : godavari
Age : 20 Gender : Female
Photo Available

848 NXV5297585
Name : Tanuja Devanand Madane
Husband's Name: Devanand Madane
House Number : c/o Devanand Bhaarat Madane
Age : 23 Gender : Female
Photo Available

849 NXV5297593
Name : Samrat Sanskar Santosh
Father's Name: Santosh subhash samrat
House Number : Main Road
Age : 20 Gender : Male
Photo Available

850 UCT8235152
Name : Hashmi Anjum Saad
Husband's Name: Saad Hashmi
House Number : 1554
Age : 22 Gender : Female
Photo Available

851 NXV5319926
Name : Asma Abudaud Bagwan
Husband's Name: Bagwan Abudaud Salam
House Number : 01
Age : 23 Gender : Female
Photo Available

852 NXV5063417
Name : PRIYA WAGHMARE
Father's Name: NITIN WAGHMARE
House Number : 0
Age : 21 Gender : Female
Photo Available

853 NXV5055157
Name : VIKAS NAIKWADI
Father's Name: VIKAS NAIKWADI
House Number : Ter
Age : 21 Gender : Male
Photo Available

854 NXV5054457
Name : PRAMOD DEVKATE
Father's Name: KAKASAHEB DEVKATE
House Number : 0
Age : 22 Gender : Male
Photo Available

855 NXV5069786
Name : SAHIL RASAL
Father's Name: DHARMARAJ RASAL
House Number : ter
Age : 22 Gender : Male
Photo Available

856 NXV5079199
Name : AKSHAY TERKAR
Father's Name: YUVRAJ TERKAR
House Number : ter
Age : 22 Gender : Male
Photo Available

857 NXV5087887
Name : MANSHI DHARMARAJ BHONDE
Husband's Name: DHARMARAJ
House Number : matang ngar ter
Age : 22 Gender : Female
Photo Available

858 NXV7203169
Name : SHAMBHU KAMBLE
Father's Name: GANPAT KAMBLE
House Number : 518
Age : 44 Gender : Male
Photo Available

859 NXV5031208
Name : ROHAN KASABE
Father's Name: BHARAT KASABE
House Number : 122
Age : 24 Gender : Male
Photo Available

860 NXV5032396
Name : NAZIYA MUNDE
Father's Name: MAHAMAD MUNDE
House Number : At/Post ter, osmanabad
Age : 21 Gender : Female
Photo Available

861 NXV7899032
Name : Bapp Babu Pethe
Father's Name: babu pethe
House Number :
Age : 35 Gender : Male
Photo Available

862 NXV7898794
Name : DATTU LIMBAJI AHAJAN
Father's Name: LIMBAJI MAHAJANA
House Number :
Age : 61 Gender : Male
Photo Available

863 NXV7899016
Name : rajesh ashok ambad
Father's Name: ashok ambad
House Number :
Age : 31 Gender : Male
Photo Available

864 NXV7898919
Name : SAMBHAJI nivratti ANDHALE
Father's Name: nivratti ANDHALE
House Number :
Age : 31 Gender : Male
Photo Available

865 NXV7898927
Name : mahadevi ramling Bande
Husband's Name: ramling Bande
House Number :
Age : 36 Gender : Female
Photo Available

866 NXV7898836
Name : NAMDEV PANDURANG BANDE
Father's Name: PANDURANG BANDE
House Number :
Age : 31 Gender : Male
Photo Available

867 NXV7898844
Name : MAHADEV PANDURANG BANDE
Father's Name: PANDURANG BANDE
House Number :
Age : 31 Gender : Male
Photo Available

868 NXV7898786
Name : PRITAM GANESH BANDE
Husband's Name: GANESH BANDE
House Number :
Age : 31 Gender : Female
Photo Available

869 NXV7898810
Name : MARUTI YASHVANT BHINGE
Father's Name: YASHVANT BHINGE
House Number :
Age : 73 Gender : Male
Photo Available

870 NXV7898901
Name : anita udhav bhosle
Husband's Name: udhav bhosle
House Number :
Age : 46 Gender : Female
Photo Available

871 NXV8065781
Name : Vikas Babasaheb Devkar
Father's Name: Babasaheb Devkar
House Number :
Age : 39 Gender : Male
Photo Available

872 NXV7898893
Name : Amol Annasaheb Hankare
Father's Name: Annasaheb Hankare
House Number :
Age : 34 Gender : Male
Photo Available

873 NXV7899024
Name : pooja amol hankare
Husband's Name: amol hankare
House Number : 0
Age : 35 Gender : Female
Photo Available

874 NXV7898943
Name : shobhaq santosh kale
Husband's Name: santosh kale
House Number :
Age : 37 Gender : Female
Photo Available

875 NXV7898877
Name : Pooja Balasaheb kanade
Father's Name: balasaheb kanade
House Number :
Age : 31 Gender : Female
Photo Available

876 NXV7899040
Name : PRADEEP BHARAT KARNAVAR
Father's Name: BHARAT KARNAVAR
House Number :
Age : 35 Gender : Male
Photo Available

877 NXV7898752
Name : ashruba gorakh kokre
Father's Name: gorakh kokre
House Number :
Age : 33 Gender : Male
Photo Available

878 NXV7898885
Name : khandu dagdu kolekar
Father's Name: dagdu kolekar
House Number :
Age : 33 Gender : Male
Photo Available

879 NXV7898828
Name : SUVARNA TANAJI MADNE
Husband's Name: TANAJI MADNE
House Number :
Age : 34 Gender : Female
Photo Available

880 NXV7898869
Name : KAVITA KHANDU MADNE
Husband's Name: KHANDU MADNE
House Number :
Age : 31 Gender : Female
Photo Available

881 NXV7898802
Name : RUKMAINQQ DATTU MAHAJAN
Husband's Name: DATTU MAHAJAN
House Number :
Age : 58 Gender : Female
Photo Available

882 NXV8065773
Name : Nandini Tanaji Mane
Husband's Name: Tanaji Mane
House Number :
Age : 36 Gender : Female
Photo Available

883 NXV7898851
Name : KUNDAN NHINESHEN MASKE
Father's Name: NHINESHEN MASKE
House Number :
Age : 31 Gender : Male
Photo Available

884 NXV7898778
Name : HARSHVARDHAN GOROBA Padule
Father's Name: GOROBA Padule
House Number :
Age : 31 Gender : Male
Photo Available

885 NXV7898745
Name : krishna ngarao pandhre
Father's Name: ngarao pandhtr
House Number :
Age : 35 Gender : Male
Photo Available

886 NXV8407736
Name : SOMANATH MAHADEV PAWAR
Father's Name: MAHADEV PAWAR
House Number :
Age : 28 Gender : Male
Photo Available

887 NXV8407702
Name : POOJA SANTOSH ROHIDAS
Father's Name: SANTOSH ROHIDAS
House Number :
Age : 29 Gender : Female
Photo Available

888 NXV8407710
Name : ANJU SUNIL ROHIDAS
Father's Name: SUNIL ROHIDAS
House Number :
Age : 28 Gender : Female
Photo Available

889 NXV7898968
Name : Rabbani Gundu Shaikh sherekar
Father's Name: Gundu Shaikh sherekar
House Number :
Age : 77 Gender : Male
Photo Available

890 NXV7898950
Name : Jeenet karim shekh sherekar
Husband's Name: KARIM shekh sherekar
House Number :
Age : 31 Gender : Female
Photo Available

891 NXV7898935
Name : NAVN ATH DATTU THIMBRE
Father's Name: DATTU THOMBRE
House Number :
Age : 31 Gender : Male
Photo Available

892 NXV7898984
Name : ASHRUBA DATTA THOMBRE
Father's Name: DATTA THOMBRE
House Number :
Age : 34 Gender : Male
Photo Available

893 NXV7898992
Name : UMA SUMED WAGHMARE
Husband's Name: SUMED WAGHMARE
House Number :
Age : 33 Gender : Female
Photo Available

894 NXV9381161
Name : ANKIT DHAWARE
Father's Name: ASHOK DHAWARE
House Number : -
Age : 28 Gender : Male
Photo Available

895 NXV9874686
Name : VISHWNATH TEKALE
Father's Name: PRAKASH TEKALE
House Number : 0
Age : 27 Gender : Male
Photo Available

896 NXV4754347
Name : SHITAL TERKAR
Husband's Name: PRADUMN TERKAR
House Number : 0
Age : 32 Gender : Female
Photo Available

897 NXV5203625
Name : kamlakar sudhakar gadade
Father's Name: sudhakar gadade
House Number : 10
Age : 21 Gender : Male
Photo Available

898 NXV5205141
Name : RUKHAYA KALAM SHAIKH
Husband's Name: KALAM SHAIKH
House Number : WARD NO 3
Age : 33 Gender : Female
Photo Available

899 NXV5312210
Name : Sidheshwar Harichandra Pasare
Father's Name: Harichandra Pasare
House Number : Satyapuri Nagar
Age : 25 Gender : Male
Photo Available

SUMMARY OF ELECTORS

A) NUMBER OF ELECTORS

		Roll Type	Roll Identification	NUMBER OF ELECTORS			
				Male	Female	Third Gender	Total
I	Original	Mother Roll	Draft Electoral Roll prepared under Special Intensive Revision - 2026	458	441	0	899
				458	441	0	899

Issued by Electoral Registration Office