ELECTORAL ROLL 2026 S13 Maharashtra

No. Name and Reservation Status of Assembly Constituency : 53 - NAGPUR SOUTH (GEN)	Part No. : 50
No. Name and Reservation Status of Parliamentary Constituency(ies) in which the Assembly Constituency is located : 10 - NAGPUR (GEN)	

1. Details of Revision

Year of Revision	2026
Qualifying Date	01-10-2026
Type of revision	Special Intensive Revision 2026
Date of Publication	31-08-2026

Roll Identification

Draft Electoral Roll prepared under Special Intensive Revision - 2026

2. Details of part and polling area

No. and name of sections in the part

1-Front Area of Gajanan Mahraj Raghuji Nagar Nagpur
2-Main Road Taj Baag Road Raghuji Nagar Nagpur
3-Chota Taj Baag Main Road Mahakal Bhavan Raghuji Nagar Nagpur
4-Dr. Ravi Charde Main Road Raghuji Nagar Nagpur

Main Town or Village	: NAGAPUR
Police Station	: SAKARDARA
Taluka	: NAGPUR
District	: NAGPUR
Pin code	: 440009

3. Polling Station Details

No. and Name of Polling Station :	Type of Polling Station (Male/Female/General)	General
50 - Raghuji Nagar **Address of Polling Station :** Mohta Science College, Sakkardara, West Side Room No. 2, Nagpur	Number of Auxiliary Polling Stations in this part :	0

4. NUMBER OF ELECTORS

Starting Serial No.	Ending Serial No.	Net Electors			
		Male	Female	Third Gender	Total
1	571	280	291	0	571

Issued by Electoral Registration Office

Nazri Naksha

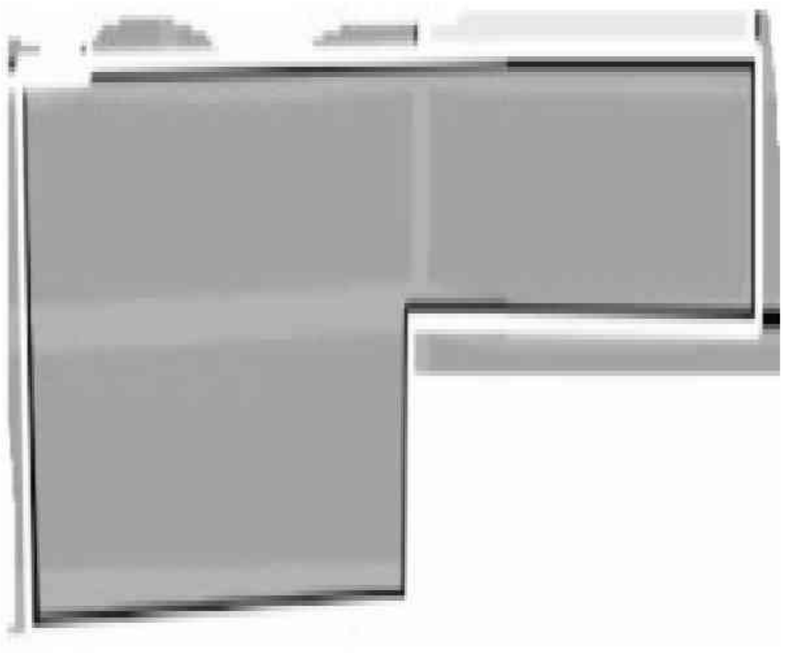

Google Map View

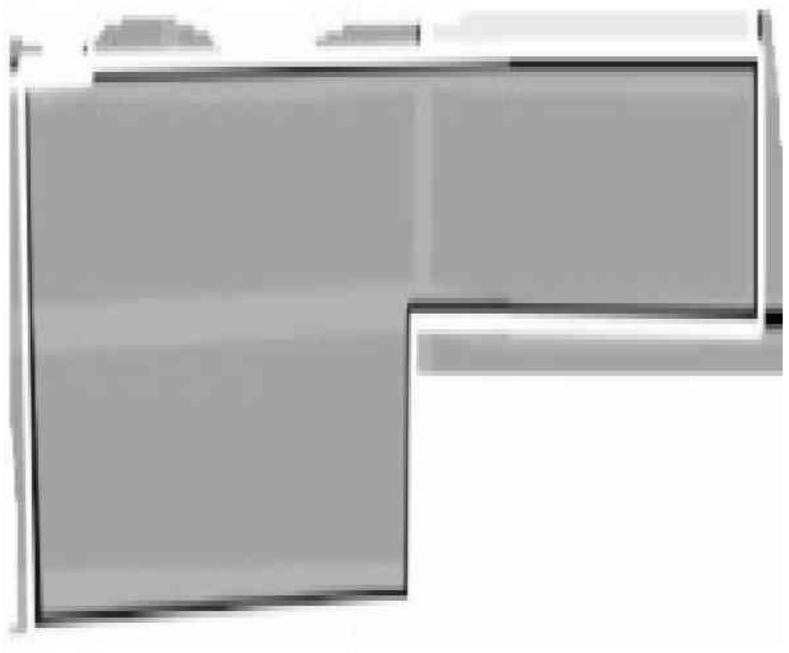

Polling Station Building Front View



Polling Station Front View



Cad View

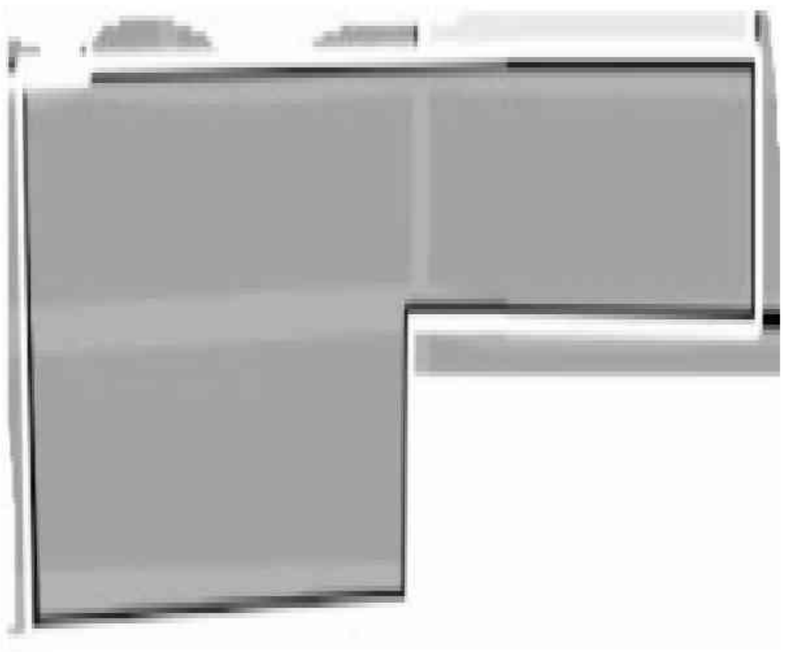

Key MAP View

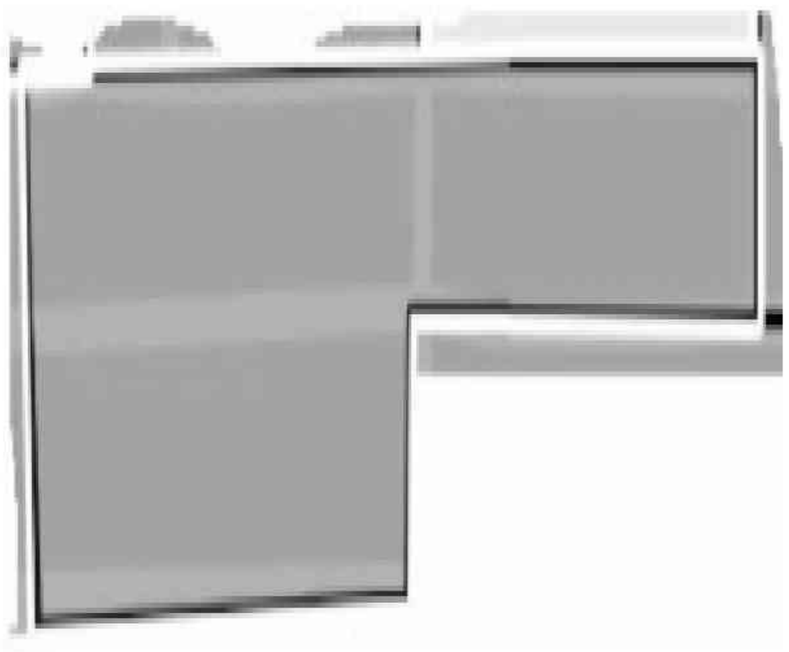

1 AIS4856795
Name : Pallavi Sham Rao Acharya
Husband's Name: Sham Rao Acharya
House Number :
Age : 44 Gender : Female
Photo Available

2 AIS4856803
Name : Sakshi Sandeep Acharya
Husband's Name: Sandeep Acharya
House Number :
Age : 45 Gender : Female
Photo Available

3 AIS6844864
Name : SHRUTIKA DEVANDRA DHOMNE
Father's Name: DEVANDRA DHOMANE
House Number :
Age : 33 Gender : Female
Photo Available

4 AIS6844880
Name : SATISH KESHAVRAO JACHAK
Father's Name: KESHAVRAO JACHAK
House Number :
Age : 74 Gender : Male
Photo Available

5 AIS7538242
Name : MOHA AMARNATH JAYSWAL
Father's Name: AMARNATH JAYSWAL
House Number :
Age : 42 Gender : Male
Photo Available

6 AIS7538234
Name : ARJUN AMARNATH JAYSWAL
Father's Name: AMARNATH JAYSWAL
House Number :
Age : 36 Gender : Male
Photo Available

7 AIS4856704
Name : Sita Bai Sudhakar Khadse
Husband's Name: Sudhakar Khadse
House Number :
Age : 59 Gender : Female
Photo Available

8 AIS4856688
Name : Siddharth Sudhakar Khadse
Father's Name: Sudhakar Khadse
House Number :
Age : 35 Gender : Male
Photo Available

9 AIS7672421
Name : PRITI RAJESH NAKTOIDE
Husband's Name: RAJESH NAKTOIDE
House Number :
Age : 40 Gender : Female
Photo Available

10 AIS6844898
Name : MADURA SACHIN PUNEKAR
Husband's Name: SACHIN PUNEKAR
House Number :
Age : 126 Gender : Female
Photo Available

11 AIS8567521
Name : ISHANT KHEKARE
Father's Name: MANOJ KHEKARE
House Number : 0
Age : 23 Gender : Male
Photo Available

12 AIS8615148
Name : ATHARV BHOSLE
Father's Name: SAMBHAJI BHOSLE
House Number : 00
Age : 27 Gender : Male
Photo Available

13 AIS7815723
Name : ANITA WASANT SHAHU
Husband's Name: WASANT SHAHU
House Number : 3
Age : 53 Gender : Female
Photo Available

14 AIS7815731
Name : PRAJKTA ABHIJIT SHAHU
Husband's Name: ABHIJIT SHAHU
House Number : 3
Age : 40 Gender : Female
Photo Available

15 AIS7815749
Name : JAYA WASANTA SHAHU
Father's Name: WASANTA SHAHU
House Number : 3
Age : 29 Gender : Male
Photo Available

16 AIS8187783
Name : Jugalkishore Sundarlal Jais
Father's Name: Sundarlal Jais
House Number : 5
Age : 68 Gender : Male
Photo Available

17 AIS8187775
Name : Kanchan Kamalkishor Jais
Husband's Name: Kamalkishor Jais
House Number : 5
Age : 66 Gender : Female
Photo Available

18 AIS1382258
Name : Ashok Kumar Sundarlal Jais
Father's Name: Sundarlal Jais
House Number : 5
Age : 64 Gender : Male
Photo Available

19 AIS8187791
Name : Kavita Jugalkishore Jais
Husband's Name: Jugalkishore Jais
House Number : 5
Age : 62 Gender : Female
Photo Available

20 AIS1382266
Name : Sunita Ashok Kumar Jais
Husband's Name: Ashok Kumar Jais
House Number : 5
Age : 58 Gender : Female
Photo Available

21 AIS1382274
Name : Nishant Kamalkishore Jais
Father's Name: Kamalkishore Jais
House Number : 5
Age : 46 Gender : Male
Photo Available

22 AIS1382282
Name : Nikunj Kamalakishor Jais
Father's Name: Kamalakishor Jais
House Number : 5
Age : 44 Gender : Male
Photo Available

23 AIS2150860
Name : Ramdas Nagorav Balpande
Father's Name: Nagorav Balpande
House Number : 7/ L / B
Age : 56 Gender : Male
Photo Available

24 AIS2150894
Name : Sunil Nagorav Balpande
Father's Name: Nagorav Balpande
House Number : 7/ L / B
Age : 53 Gender : Male
Photo Available

25 AIS2284586
Name : Ranjana Ramdas Balpande
Husband's Name: Ramdas Balpande
House Number : 7/ L / B
Age : 48 Gender : Female
Photo Available

26 AIS5295928
Name : Atul Baban Rao Ingle
Father's Name: Baban Rao Ingle
House Number : 11
Age : 61 Gender : Male
Photo Available

27 AIS5295936
Name : Rita Atul Ingle
Husband's Name: Atul Ingle
House Number : 11
Age : 53 Gender : Female
Photo Available

28 AIS8447369
Name : GAURAV THAKRE
Father's Name: PRASHANT THAKRE
House Number : 13
Age : 24 Gender : Male
Photo Available

29 AIS7376387
Name : Priti Sawatkar
Husband's Name: Gajanan Sawatkar
House Number : 30
Age : 40 Gender : Female
Photo Available

30 AIS4856928
Name : Ramratan Nishiramji Harode
Father's Name: Nishiramaji Harde
House Number : Plot No 46
Age : 68 Gender : Male
Photo Available

31 AIS4856878
Name : Sonali Ramratan Harode
Husband's Name: Ramratan Harde
House Number : Plot No 46
Age : 58 Gender : Female
Photo Available

32 AIS4856860
Name : Sweety Ramratan Harode
Father's Name: Ramratan Harde
House Number : Plot No 46
Age : 35 Gender : Female
Photo Available

33 AIS4856746
Name : Nitin Zingaji Sidam
Father's Name: Zingaji Sidam
House Number : 47
Age : 64 Gender : Male
Photo Available

34 AIS7325673
Name : PRIYANKA AVINASH BANSOD
Father's Name: AVINASH BANSOD
House Number : 50
Age : 32 Gender : Female
Photo Available

35 AIS7672405
Name : ANIKET VINOD KOTHE
Father's Name: VINOD KOTHE
House Number : 72
Age : 32 Gender : Male
Photo Available

36 AIS8509432
Name : Snehal Kothe
Father's Name: Vinodrav Kothe
House Number : 72
Age : 30 Gender : Female
Photo Available

37 AIS4856514
Name : Manisha Sunil Balpande
Husband's Name: Sunil Balpande
House Number : L 7 8
Age : 43 Gender : Female
Photo Available

38 AIS1382654
Name : Sangeeta Hirunath Bansod
Husband's Name: Hirunath Bansod
House Number : L 7 9
Age : 55 Gender : Female
Photo Available

39 AIS1341031
Name : Pramod Prahlad Band
Father's Name: Prahlad Band
House Number : 8/2
Age : 55 Gender : Male
Photo Available

40 AIS1341049
Name : Pushpa Pramod Band
Husband's Name: Pramod Band
House Number : 8/2
Age : 48 Gender : Female
Photo Available

41 AIS1382308
Name : Jyoti Vijay Mahatme
Husband's Name: Vijay Mahatme
House Number : 8/2
Age : 61 Gender : Female
Photo Available

42 AIS7877376
Name : CHANDNI AKHIL DEOTE
Husband's Name: AKHIL DEOTE
House Number : 8/4
Age : 36 Gender : Female
Photo Available

43 AIS7877368
Name : ABOLI PARAG DEOTE
Husband's Name: PARAG DEOTE
House Number : 8/4
Age : 35 Gender : Female
Photo Available

44 AIS2331486
Name : Akhil Prakash Devate
Father's Name: Prakash Devate
House Number : L 8 4
Age : 37 Gender : Male
Photo Available

45 AIS2331478
Name : Shweta Vikas Devate
Father's Name: Vikas Devate
House Number : L 8 4
Age : 37 Gender : Female
Photo Available

46 AIS4856456
Name : Abhay Pundalikrao Bural
Father's Name: Pundalikrao Bural
House Number : L 8/7
Age : 47 Gender : Male
Photo Available

47 BKG2273779
Name : Shrikant Jaganarav Borakute
Father's Name: Jaganarav Borakute
House Number : 89
Age : 41 Gender : Male
Photo Available

48 AIS2332021
Name : Rekha Ramesh Meshram
Husband's Name: Ramesh Meshram
House Number : 94
Age : 59 Gender : Female
Photo Available

49 AIS7569080
Name : Rahul Mukunda Bansod
Father's Name: Mukunda Bansod
House Number : 97
Age : 39 Gender : Male
Photo Available

50 AIS7877293
Name : SUYASH SANJAY MAHAKALKAR
Father's Name: SANJAY MAHAKALKAR
House Number : 97, MAHAKALKAR BHAVAN
Age : 26 Gender : Male
Photo Available

51 BKG0786145
Name : Parag Narendra Bhusari
Father's Name: Narendra Bhusari
House Number : 99
Age : 41 Gender : Male
Photo Available

52 AIS4856548
Name : Jai Arun Shrivas
Father's Name: Arun Shrivas
House Number : 103
Age : 35 Gender : Male
Photo Available

53 AIS6637375
Name : Mamta Manoj Kadu
Husband's Name: Manoj Kadu
House Number : 108
Age : 39 Gender : Female
Photo Available

54 BKG0964932
Name : Sunita Prakash Savvalakhe
Husband's Name: Prakash Savvalakhe
House Number : 128
Age : 53 Gender : Female
Photo Available

55 AIS6637367
Name : Ashish Kishor Khadatakar
Father's Name: Kishor Khadatakar
House Number : 129
Age : 40 Gender : Male
Photo Available

56 AIS2392827
Name : Sushma Sunil Satav
Husband's Name: Sunil Satav
House Number : 130
Age : 44 Gender : Female
Photo Available

57 AIS6637383
Name : Genudas Suresh Chopade
Father's Name: Suresh Chopade
House Number : 132
Age : 37 Gender : Male
Photo Available

58 AIS7486806
Name : ANKIT SUNIL PARKHE
Father's Name: SUNIL PARKHE
House Number : 134
Age : 32 Gender : Male
Photo Available

59 AIS1382415
Name : Deepak Uttamrao Deshmukh
Father's Name: Uttamrao Deshmukh
House Number : 135
Age : 61 Gender : Male
Photo Available

60 AIS7877202
Name : VAISHNAVI SUDHAKAR NIMJE
Father's Name: SUDHAKAR NIMJE
House Number : 1/38
Age : 25 Gender : Female
Photo Available

61 AIS6637391
Name : Deepak Govind Rao Misal
Father's Name: Govind Rao Misal
House Number : 162
Age : 61 Gender : Male
Photo Available

62 AIS8111817
Name : CHETANA MANOJ HOIE
Husband's Name: MANOJ HOIL
House Number : H.NO.16/2
Age : 56 Gender : Female
Photo Available

63 AIS1382423
Name : Sudhir Dharmdas Tirpude
Father's Name: Dharmdas Tirpude
House Number : 163
Age : 41 Gender : Male
Photo Available

64 AIS1382431
Name : Vishal Dharmdas Tirpude
Father's Name: Dharmdas Tirpude
House Number : 163
Age : 39 Gender : Male
Photo Available

65 BKG0887018
Name : Padma Sukhdev Ingle
Husband's Name: Sukhdev Ingle
House Number : 166
Age : 64 Gender : Female
Photo Available

66 BKG0979468
Name : Manoj Sukhdev Ingle
Father's Name: Sukhdev Ingle
House Number : 166
Age : 42 Gender : Male
Photo Available

67 AIS1382449
Name : Shankar Keshav Rao Kevte
Father's Name: Keshav Rao Kevte
House Number : 170
Age : 70 Gender : Male
Photo Available

68 AIS1266139
Name : Shobha Shankar Rao Kevte
Husband's Name: Shankar Rao Kevte
House Number : 170
Age : 62 Gender : Female
Photo Available

69 AIS2250025
Name : Prajval Vijay Mahatme
Father's Name: Vijay Mahatme
House Number : 1/8/2
Age : 37 Gender : Male
Photo Available

70 AIS8110751
Name : AMAN KHUNERE
Father's Name: ARVIND KHUNERE
House Number : 1/84, RAJA RUGHJI NGAR
Age : 28 Gender : Male
Photo Available

71 AIS7569072
Name : SANJAY RAGHUNATH AWACHAT
Father's Name: Raghunath Avchat
House Number : 204
Age : 64 Gender : Male
Photo Available

72 AIS2250157
Name : Leena Sanjay Avchat
Husband's Name: Sanjay Avchat
House Number : 204
Age : 60 Gender : Female
Photo Available

73 AIS8447252
Name : RAJNI KARNE
Husband's Name: RAJENDRA KARNE
House Number : 210
Age : 62 Gender : Female
Photo Available

74 AIS8448805
Name : RAJENDRA KARNE
Father's Name: KUMAR KARNE
House Number : 210
Age : 57 Gender : Male
Photo Available

75 AIS8447278
Name : JYOTSNA KARNE
Father's Name: RAJENDRA KUMAR KARNE
House Number : 210
Age : 35 Gender : Female
Photo Available

76 AIS8448748
Name : KUSH KARNE
Father's Name: KUMAR KARNE
House Number : 210
Age : 34 Gender : Male
Photo Available

77 AIS7672447
Name : ANKITA GANGADHAR JAWALKAR
Father's Name: GANGADHAR JAWALKAR
House Number : 255
Age : 27 Gender : Male
Photo Available

78 AIS6637409
Name : Suresh Balwant Daladale
Father's Name: Balwant Daladale
House Number : 309
Age : 66 Gender : Male
Photo Available

79 AIS7569098
Name : Tejaswini Suresh Daladale
Husband's Name: Suresh Daladale
House Number : 309
Age : 60 Gender : Female
Photo Available

80 AIS7486772
Name : BHADYASHREE SUNIL PARKHE
Husband's Name: SUNIL PARKHE
House Number : 391
Age : 58 Gender : Female
Photo Available

81 AIS7569106
Name : Devji Naravadaji Vanjari
Father's Name: Naravadaji Vanjari
House Number : 407
Age : 60 Gender : Male
Photo Available

82 AIS2250231
Name : Vijaya Devji Vanjari
Husband's Name: Devji Vanjari
House Number : 407
Age : 52 Gender : Female
Photo Available

83 AIS8448938
Name : KAUSTUBH WANJARI
Father's Name: DEVAJI WANJARI
House Number : 407
Age : 25 Gender : Male
Photo Available

84 AIS7569114
Name : Gopal Sambaji Dhopate
Father's Name: Sambaji Dhopate
House Number : 410
Age : 76 Gender : Male
Photo Available

85 AIS2250272
Name : Kalpana Hanumant Meshram
Husband's Name: Hanumant Meshram
House Number : 501
Age : 63 Gender : Female
Photo Available

86 AIS6637425
Name : Himamat Naththuji Meshram
Father's Name: Naththuji Meshram
House Number : 501
Age : 62 Gender : Male
Photo Available

87 AIS2392975
Name : Vatsalabai Narayan Mhaskar
Husband's Name: Narayan Mhaskar
House Number : 501
Age : 82 Gender : Female
Photo Available

88 AIS2250066
Name : Ashok Shivram Kharate
Father's Name: Shivram Kharate
House Number : 506
Age : 64 Gender : Male
Photo Available

89 AIS2250074
Name : Poonam Ashok Kharate
Husband's Name: Ashok Kharate
House Number : 506
Age : 55 Gender : Female
Photo Available

90 AIS2295806
Name : Neha Ashok Kharate
Father's Name: Ashok Kharate
House Number : 506
Age : 34 Gender : Female
Photo Available

91 AIS8103491
Name : MOHAN CHHOGALALJI BHAIYA
Father's Name: CHHOGALALJI BHAIYA
House Number : PLOT 5/27
Age : 74 Gender : Male
Photo Available

92 AIS7408156
Name : Sunil Raghvan Kannan
Father's Name: Raghvan Kannan
House Number : 5/66
Age : 53 Gender : Male
Photo Available

93 AIS4856530
Name : Monica Rajesh Mishra
Father's Name: Rajesh Mishra
House Number : 5/70
Age : 34 Gender : Female
Photo Available

94 AIS4856597
Name : Shilpa Anil Guradavar
Husband's Name: Anil Guradavar
House Number : 5/85
Age : 49 Gender : Female
Photo Available

95 AIS4856605
Name : Anil Marutirav Guradavar
Father's Name: Marutirav Guradavar
House Number : 5/85
Age : 49 Gender : Male
Photo Available

96 AIS7848302
Name : RAJANI NAMDEV HAZARE
Husband's Name: NAMDEV HAZARE
House Number : PLOT NO.6/46
Age : 44 Gender : Female
Photo Available

97 BKG2268464
Name : Laxmikant Ashok Mohadikar
Father's Name: Ashok Mohadikar
House Number : 6 70
Age : 45 Gender : Male
Photo Available

98 AIS1382456
Name : Ashok Shankar Mohodikar
Father's Name: Shankar Mohodikar
House Number : 670
Age : 75 Gender : Male
Photo Available

99 AIS1382464
Name : Sunder Ashok Mohodikar
Husband's Name: Ashok Mohodikar
House Number : 670
Age : 64 Gender : Female
Photo Available

100 AIS7900210
Name : SHITAL RAVI DASARWAR
Husband's Name: RAVI DASARWAR
House Number : 68/4
Age : 42 Gender : Female
Photo Available

101 AIS7605405
Name : Anjali Damodar Mohadikar
Husband's Name: Damodar Mohadikar
House Number : 70/6
Age : 43 Gender : Female
Photo Available

102 AIS1382662
Name : Jayashri Satish Bansod
Husband's Name: Satish Bansod
House Number : L 7 10
Age : 45 Gender : Female
Photo Available

103 AIS1341098
Name : Seema Praveen Bansod
Husband's Name: Praveen Bansod
House Number : L/7/10
Age : 45 Gender : Female
Photo Available

104 AIS8567604
Name : HARSH BANSOD
Father's Name: SANJAY BANSOD
House Number : L7/10
Age : 23 Gender : Male
Photo Available

105 AIS4856662
Name : Sarika Praveen Joshi
Husband's Name: Praveen Joshi
House Number : L/7/12
Age : 44 Gender : Female
Photo Available

106 AIS6503197
Name : Prasad Subhash Sapkal
Father's Name: Subhash Sapkal
House Number : L/7/44
Age : 48 Gender : Male
Photo Available

107 AIS6566749
Name : Snehal Rajshekhar Bhide
Father's Name: Rajshekhar Bhide
House Number : L8/11
Age : 33 Gender : Female
Photo Available

108 AIS1382324
Name : Sonal Ajayarav Dhavagade
Husband's Name: Ajayarav Dhavagade
House Number : 8/13
Age : 44 Gender : Female
Photo Available

109 AIS8111858
Name : MANOJ MANOHARRAO HOLE
Father's Name: MANOHARRO HOLE
House Number : H.NO.L8/14
Age : 57 Gender : Male
Photo Available

110 AIS7486764
Name : ANIKET VINOD ELKUNCHWAR
Father's Name: VINOD ELKUNCHWAR
House Number : L-8/22
Age : 40 Gender : Male
Photo Available

111 AIS8567331
Name : ANITA PAVAR
Husband's Name: PRAVIN PAVAR
House Number : L/8/23
Age : 52 Gender : Female
Photo Available

112 AIS8567364
Name : SHRADDHEY PAWAR
Father's Name: PRAVIN PAWAR
House Number : L-8-23
Age : 25 Gender : Male
Photo Available

113 AIS0101048
Name : ANAND DATTATRAY JAGDALE
Father's Name: Dattatreya Jagdale
House Number : 8 25
Age : 55 Gender : Male
Photo Available

114 AIS1438902
Name : Mohan Dattatreya Jagdale
Father's Name: Dattatreya Jagdale
House Number : 8 25
Age : 60 Gender : Male
Photo Available

115 AIS7325715
Name : Devyani Mohan Jagdale
Father's Name: Mohan Jagdale
House Number : L-8/25
Age : 31 Gender : Female
Photo Available

116 AIS1435874
Name : Aakanksha Anand Jagdale
Husband's Name: Anand Jagdale
House Number : L-8/25, V H B COLONY,
Age : 49 Gender : Female
Photo Available

117 AIS1382472
Name : Anil Sadashiv Patrikar
Father's Name: Sadashiv Patrikar
House Number : 826
Age : 81 Gender : Male
Photo Available

118 AIS0101121
Name : Ranjana Anil Patrikar
Husband's Name: Anil Patrikar
House Number : 826
Age : 76 Gender : Female
Photo Available

119 AIS0101147
Name : Shrikant Anil Patrikar
Father's Name: Anil Patrikar
House Number : 826
Age : 50 Gender : Male
Photo Available

120 AIS6637441
Name : Suresh Haribhau Petkar
Father's Name: Haribhau Petkar
House Number : 827
Age : 85 Gender : Male
Photo Available

121 AIS6637458
Name : Nitin Suresh Petkar
Father's Name: Suresh Petkar
House Number : 827
Age : 53 Gender : Male
Photo Available

122 AIS0101153
Name : Smita Suresh Petkar
Husband's Name: Suresh Petkar
House Number : 8-27
Age : 78 Gender : Female
Photo Available

123 AIS8034191
Name : MRUNAL PETKAR
Husband's Name: NITIN PETKAR
House Number : PLOT NO L 8/27
Age : 53 Gender : Female
Photo Available

124 AIS0101173
Name : Shrikant Baburao Vankhede
Father's Name: Baburao Vankhede
House Number : 828
Age : 57 Gender : Male
Photo Available

125 BKG2274439
Name : Mangla Kishor Vankhede
Husband's Name: Kishor Vankhede
House Number : 828
Age : 57 Gender : Female
Photo Available

126 AIS6637474
Name : Kishor Baburao Wankhede
Father's Name: Baburao Wnkhede
House Number : 828
Age : 61 Gender : Male
Photo Available

127 AIS8694663
Name : Shivani Kishor Wankhede
Father's Name: Kishor Wankhede
House Number : L-8/28
Age : 29 Gender : Female
Photo Available

128 AIS8694705
Name : Shreyash Kishor Wankhede
Father's Name: Kishor Wankhede
House Number : L-8/28
Age : 26 Gender : Male
Photo Available

129 AIS0101064
Name : Sanjay Abarav Dhage
Father's Name: Abarav Dhage
House Number : 8 30
Age : 60 Gender : Male
Photo Available

130 AIS0101084
Name : Madhuri Sanjay Dhage
Husband's Name: Sanjay Dhage
House Number : 830
Age : 53 Gender : Female
Photo Available

131 AIS6637482
Name : Prashant Abarao Dhage
Father's Name: Abarao Dhage
House Number : 830
Age : 52 Gender : Male
Photo Available

132 AIS7325608
Name : Rutuja Ulhas Deshpande
Husband's Name: Ulhas Deshpande
House Number : 8/31
Age : 70 Gender : Female
Photo Available

133 AIS1382480
Name : Meena Tilak Gupta
Husband's Name: Tilak Gupta
House Number : 835
Age : 64 Gender : Female
Photo Available

134 AIS7877301
Name : YOGESH RUDRKUMAR DHAGE
Father's Name: RUDRKUMAR DHAGE
House Number : L-8/38
Age : 29 Gender : Male
Photo Available

135 AIS1382498
Name : Vinod Jaisingh Pawar
Father's Name: Jaisingh Pawar
House Number : 839
Age : 68 Gender : Male
Photo Available

136 AIS1382506
Name : Kamini Vinod Pawar
Husband's Name: Vinod Pawar
House Number : 839
Age : 63 Gender : Female
Photo Available

137 AIS8711558
Name : Vishalsingh Vinodsingh Pawar
Father's Name: Vinodsingh Pawar
House Number : L - 8 /39
Age : 35 Gender : Male
Photo Available

138 AIS7672371
Name : VINAYSINGH VINODSINGH PAWAR
Father's Name: VINOD PAWAR
House Number : L/8/39
Age : 39 Gender : Male
Photo Available

139 AIS7672389
Name : Nikita Vinaysingh pawar
Husband's Name: VINAY PAWAR
House Number : L/8/39
Age : 32 Gender : Female
Photo Available

140 AIS8054801
Name : Aishwarya Pravin Laturkar Laturkar
Father's Name: Pravin Laturkar Laturkar
House Number : L-8/41
Age : 31 Gender : Female
Photo Available

141 AIS7408149
Name : Kalpana Sudhakarrao Khadse
Father's Name: Sudhakarrao Khadse
House Number : 94/1
Age : 34 Gender : Female
Photo Available

142 AIS4856811
Name : Arvind Mahadev Katakine
Father's Name: Mahadev Katakine
House Number : 941
Age : 58 Gender : Male
Photo Available

143 AIS1341064
Name : Anita Sanjay Banasod
Husband's Name: Sanjay Banasod
House Number : 1012
Age : 55 Gender : Female
Photo Available

144 AIS7672397
Name : TEJAL PRAKASH SAWWALAKHE
Father's Name: PRAKASH SAWWALAKHE
House Number : 1/128
Age : 27 Gender : Female
Photo Available

145 AIS1382514
Name : PRAKASH BAPURAO SAWWALAKHE
Father's Name: BAPURAO SAWWALAKHE
House Number : 1128
Age : 56 Gender : Male
Photo Available

146 AIS7845860
Name : BHAVNA VIVEK ACHARYA
Husband's Name: VIVEK ACHARYA
House Number : 1/129
Age : 47 Gender : Female
Photo Available

147 AIS1382530
Name : Sandeep Prabhakar Acharya
Father's Name: Prabhakar Acharya
House Number : 1129
Age : 55 Gender : Male
Photo Available

148 AIS1382548
Name : Vivek Prabhakar Acharya
Father's Name: Prabhakar Acharya
House Number : 1129
Age : 50 Gender : Male
Photo Available

149 AIS0101183
Name : Vilas Prabhakar Acharya
Father's Name: Prabhakar Acharya
House Number : 1129
Age : 48 Gender : Male
Photo Available

150 AIS2392744
Name : Satish Marot Rao Satav
Father's Name: Marot Rao Satav
House Number : 1 130
Age : 45 Gender : Male
Photo Available

151 AIS2392991
Name : Indu Marot Rao Satav
Husband's Name: Marot Rao Satav
House Number : 1130
Age : 76 Gender : Female
Photo Available

152 AIS1382589
Name : Sunil Marot Rao Satav
Father's Name: Marot Rao Satav
House Number : 1130
Age : 53 Gender : Male
Photo Available

153 AIS1382134
Name : Deepak Pundalikarav Sayavan
Father's Name: Pundalikarav Sayavan
House Number : 1 132
Age : 66 Gender : Male
Photo Available

154 AIS1382126
Name : Sunil Pundalikarav Sayavan
Father's Name: Pundalikarav Sayavan
House Number : 1 132
Age : 58 Gender : Male
Photo Available

155 BKG2269215
Name : Jyoti Deepak Sayavan
Husband's Name: Deepak Sayavan
House Number : 1 132
Age : 44 Gender : Female
Photo Available

156 AIS8441875
Name : SUNITA SAIWAN
Husband's Name: SUNIL SAIWAN
House Number : 1/132
Age : 53 Gender : Female
Photo Available

157 AIS8449027
Name : ANIKET SAYWAN
Father's Name: SUNIL SAYWAN
House Number : 1/132
Age : 28 Gender : Male
Photo Available

158 AIS8441925
Name : ABHISHEK SAYWAN
Father's Name: DIPAK SAYWAN
House Number : 1/132
Age : 25 Gender : Male
Photo Available

159 AIS7833098
Name : KUMAR RAJU CHANDEKAR
Father's Name: RAJU CHANDEKAR
House Number : 1/135
Age : 36 Gender : Male
Photo Available

160 AIS0101220
Name : Raju Baburao Chandekar
Father's Name: Baburao Chandekar
House Number : 1135
Age : 60 Gender : Male
Photo Available

161 AIS0101238
Name : Maya Raju Chandekar
Husband's Name: Raju Chandekar
House Number : 1135
Age : 57 Gender : Female
Photo Available

162 AIS7840036
Name : DIKSHA KUMBHAR CHANDEKAR
Father's Name: KUMBHAR CHANDEKAR
House Number : PLOT .NO. 1/135
Age : 32 Gender : Female
Photo Available

163 AIS8645822
Name : Madhura Nikhil Vyas
Husband's Name: NIKHIL VYAS
House Number : A 11 -76
Age : 44 Gender : Female
Photo Available

164 AIS7325574
Name : Shital Anand Yeole
Husband's Name: Anand Yeole
House Number : 12L7-8
Age : 46 Gender : Female
Photo Available

165 AIS4856944
Name : Pankaj Madhav Rao Nakatode
Father's Name: Madhav Rao Nakatode
House Number : 128/4
Age : 39 Gender : Male
Photo Available

166 AIS7877343
Name : NAKUL RAVINDRA KHASALE
Father's Name: RAVINDRA KHASALE
House Number : 132/6
Age : 29 Gender : Male
Photo Available

167 BKG0979344
Name : Rahul Sukhadeorao Ingle
Father's Name: Sukhadeorao Ingle
House Number : 166/2
Age : 40 Gender : Male
Photo Available

168 AIS8448813
Name : VRUSHABH DHORE
Father's Name: RAJU DHORE
House Number : 16 L8/4
Age : 29 Gender : Male
Photo Available

169 AIS8442105
Name : PRAJWAL DHORE
Father's Name: VILAS DHORE
House Number : 16/8/4
Age : 26 Gender : Male
Photo Available

170 AIS8442048
Name : ADITYA DHORE
Father's Name: VILAS DHORE
House Number : 16/L8/4
Age : 24 Gender : Male
Photo Available

171 AIS8447419
Name : PIYUSH DHORE
Father's Name: RAJU DHORE
House Number : 16 L/8/5
Age : 25 Gender : Male
Photo Available

172 AIS7605439
Name : Abhishek Avinash Vyas
Father's Name: Avinash Vyas
House Number : 1/8/16
Age : 37 Gender : Male
Photo Available

173 BKG0966911
Name : Anoop Panjabrao Yevale
Father's Name: Panjabrao Yevale
House Number : 1 8 23
Age : 45 Gender : Male
Photo Available

174 BKG2274249
Name : Vibhaya Jitendra Dhage
Husband's Name: Jitendra Dhage
House Number : 1 8 30
Age : 52 Gender : Female
Photo Available

175 AIS6637680
Name : Saurabhi Ameer Likhate
Husband's Name: Ameer Likhate
House Number : 1-8-32
Age : 54 Gender : Female
Photo Available

176 AIS6637599
Name : Minakshi Deepak Khasale
Husband's Name: Deepak Khasale
House Number : 1-8-34
Age : 55 Gender : Female
Photo Available

177 AIS6566731
Name : Meghshyam Rudrakumar Dhage
Father's Name: Rudrakumar Dhage
House Number : 1 8/38
Age : 34 Gender : Male
Photo Available

178 AIS2613206
Name : Kavita Prashant Ganorkar
Husband's Name: Prashant Ganorkar
House Number : 1/8/43
Age : 42 Gender : Female
Photo Available

179 AIS7165715
Name : Rushikesh Devendra Dhomane
Father's Name: Devendra Dhomane
House Number : 2/128
Age : 31 Gender : Male
Photo Available

180 AIS2392603
Name : Vinay Bhaurao Rajurkar
Father's Name: Bhaurao Rajurkar
House Number : 2/128
Age : 53 Gender : Male
Photo Available

181 AIS2250082
Name : Harish Bhaurao Rajurkar
Father's Name: Bhaurao Rajurkar
House Number : 2/128
Age : 47 Gender : Male
Photo Available

182 AIS7569064
Name : Rina Harish Rajurkar
Husband's Name: Harish Rajurkar
House Number : 2/128
Age : 42 Gender : Female
Photo Available

183 BKG0966630
Name : Jaya Sanjay More
Husband's Name: Sanjay More
House Number : 2 129
Age : 46 Gender : Female
Photo Available

184 AIS7605421
Name : Damodar Nanaji More
Father's Name: Nanaji More
House Number : 2/129
Age : 59 Gender : Male
Photo Available

185 AIS7605413
Name : Archana Damodar More
Husband's Name: Damodar More
House Number : 2/129
Age : 43 Gender : Female
Photo Available

186 AIS0100987
Name : Sanjay Nana More
Father's Name: Nana More
House Number : 2-129
Age : 54 Gender : Male
Photo Available

187 AIS6637508
Name : Prashant Pundlik Shinganapure
Father's Name: Pundlik Shinganapure
House Number : 2131
Age : 56 Gender : Male
Photo Available

188 AIS0101252
Name : Rajesh Pundlik Shinganapure
Father's Name: Pundlik Shinganapure
House Number : 2131
Age : 54 Gender : Male
Photo Available

189 AIS3506243
Name : Rajni Pundlik Shinganapure
Father's Name: Pundlik Shinganapure
House Number : 2131
Age : 53 Gender : Female
Photo Available

190 AIS6637516
Name : Shrikant Pundlik Shinganapure
Father's Name: Pundlik Shinganapure
House Number : 2131
Age : 49 Gender : Male
Photo Available

191 AIS6637276
Name : Pratibha Prashant Shinganapure
Husband's Name: Prashant Shinganapure
House Number : 2-131
Age : 52 Gender : Female
Photo Available

192 AIS1382167
Name : Trupti Vineshvar Kukde
Husband's Name: Vineshvar Kukde
House Number : 2 132
Age : 44 Gender : Female
Photo Available

193 AIS8056194
Name : MONALI KUKDE
Husband's Name: DINESH KUKDE
House Number : 2/132 RAGHOJI NAGAR
Age : 37 Gender : Female
Photo Available

194 AIS1382597
Name : Prashant Vishveshwar Kukde
Father's Name: Vishveshwar Kukde
House Number : 2132
Age : 49 Gender : Male
Photo Available

195 AIS6637532
Name : Dinesh Vishveshvararav Kukde
Father's Name: Vishveshvararav Kukde
House Number : 2132
Age : 45 Gender : Male
Photo Available

196 AIS6637284
Name : Sonali Mohan Pachakvade
Husband's Name: Mohan Pachakvade
House Number : 2/133
Age : 48 Gender : Female
Photo Available

197 AIS0101282
Name : Mohan Vitthal Pachakvade
Father's Name: Vitthal Pachakvade
House Number : 2133
Age : 52 Gender : Male
Photo Available

198 BKG0978353
Name : Sandeep Haribhau Bhoyar
Father's Name: Haribhau Bhoyar
House Number : 2 134
Age : 45 Gender : Male
Photo Available

199 AIS0101292
Name : Haribhau Santosh Bhoyar
Father's Name: Santosh Bhoyar
House Number : 2134
Age : 76 Gender : Male
Photo Available

200 AIS0101303
Name : Rekha Haribhau Bhoyar
Husband's Name: Haribhau Bhoyar
House Number : 2134
Age : 66 Gender : Female
Photo Available

201 AIS8187858
Name : Vilas Santosh Bhoyar
Father's Name: Santosh Bhoyar
House Number : 2134
Age : 54 Gender : Male
Photo Available

202 BKG0978163
Name : Vinayak Mahadev Gadve
Father's Name: Mahadev Gadve
House Number : 2 135
Age : 79 Gender : Male
Photo Available

203 BKG0978171
Name : Maya Vinayak Gadve
Husband's Name: Vinayak Gadve
House Number : 2 135
Age : 71 Gender : Female
Photo Available

204 BKG0966408
Name : Krunal Vinayak Gadve
Father's Name: Vinayak Gadve
House Number : 2/135
Age : 43 Gender : Male
Photo Available

205 BKG0979401
Name : Praveen Vinayakrao Gadhave
Father's Name: Vinayakrao Gadhave
House Number : 2135
Age : 46 Gender : Male
Photo Available

206 AIS4856779
Name : Sandhya Ramhari Misar
Father's Name: Ramhari Misar
House Number : 3/128
Age : 62 Gender : Female
Photo Available

207 AIS6973325
Name : Gaurav Ramhari Misar
Father's Name: Ramhari Misar
House Number : 3/128
Age : 32 Gender : Male
Photo Available

208 AIS6637557
Name : Kishor Mahadev Khadatakar
Father's Name: Mahadev Khadatakar
House Number : 3129
Age : 67 Gender : Male
Photo Available

209 AIS6637565
Name : Nanda Kishor Khadatakar
Husband's Name: Kishor Khadatakar
House Number : 3129
Age : 63 Gender : Female
Photo Available

210 BKG0966481
Name : AVINASH ANAND DHORE
Father's Name: ANAND DHORE
House Number : 3 131
Age : 66 Gender : Male
Photo Available

211 BKG0966473
Name : Priti Avinash Dhore
Husband's Name: Avinash Dhore
House Number : 3 131
Age : 54 Gender : Female
Photo Available

212 AIS4856415
Name : Rahul Bhaiyyaji Nimkar
Father's Name: Bhaiyyaji Nimkar
House Number : 3/135
Age : 39 Gender : Male
Photo Available

213 AIS4856423
Name : Shweta Bhaiyyaji Nimkar
Father's Name: Bhaiyyaji Nimkar
House Number : 3/135
Age : 36 Gender : Female
Photo Available

214 AIS8502114
Name : LATA NALODE
Husband's Name: ASHOKRAO NALODE
House Number : QR NO 3/213
Age : 57 Gender : Female
Photo Available

215 AIS6637300
Name : Waman Shankar Desai
Father's Name: Shankar Desai
House Number : 3-470
Age : 77 Gender : Male
Photo Available

216 AIS6637318
Name : Usha Waman Desai
Husband's Name: Waman Desai
House Number : 3-470
Age : 70 Gender : Female
Photo Available

217 AIS7569056
Name : Rajesh Madhovarav Nakatode
Father's Name: Madhovarav Nakatode
House Number : 4 128
Age : 43 Gender : Male
Photo Available

218 AIS1382233
Name : Sanjay Marot Rao Dhote
Father's Name: Marot Rao Dhote
House Number : 4 135
Age : 54 Gender : Male
Photo Available

219 AIS1382225
Name : Madhuri Rajendra Dhote
Husband's Name: Rajendra Dhote
House Number : 4 135
Age : 50 Gender : Female
Photo Available

220 AIS8613671
Name : PRACHI DESHMUKH
Father's Name: PRAMOD DESHMUKH
House Number : 4/135
Age : 26 Gender : Female
Photo Available

221 BKG0966788
Name : Varsha Sanjay Dhote
Husband's Name: Sanjay Dhote
House Number : 4/135
Age : 44 Gender : Female
Photo Available

222 AIS8567380
Name : SAVITA KENDHE
Husband's Name: RAJESH KENDHE
House Number : 5/130
Age : 43 Gender : Female
Photo Available

223 AIS1340991
Name : Vinod Nagovarav Kavle
Father's Name: Nagovarav Kavle
House Number : 5 131
Age : 64 Gender : Male
Photo Available

224 AIS1341007
Name : Vaishali Vinod Kavle
Husband's Name: Vinod Kavle
House Number : 5 131
Age : 62 Gender : Female
Photo Available

225 AIS2250033
Name : Bhagyashree Vinod Kavle
Father's Name: Vinod Kavle
House Number : 5/131
Age : 35 Gender : Female
Photo Available

226 AIS7165707
Name : Akash Prakaashrao Dhole
Father's Name: Prakaashrao Dhole
House Number : 5/133
Age : 37 Gender : Male
Photo Available

227 AIS7605397
Name : Sourabh Prakash Dhole
Father's Name: Prakash Dhole
House Number : 5/133
Age : 35 Gender : Male
Photo Available

228 BKG0787994
Name : Prakash Gajananrao Dhole
Father's Name: Gajananrao Dhole
House Number : 5133
Age : 71 Gender : Male
Photo Available

229 AIS0101361
Name : Uttam Gangaram Deshmukh
Father's Name: Gangaram Deshmukh
House Number : 5135
Age : 88 Gender : Male
Photo Available

230 AIS0101371
Name : Hirabai Uttam Deshmukh
Husband's Name: Uttam Deshmukh
House Number : 5135
Age : 86 Gender : Female
Photo Available

231 AIS2332039
Name : Nilesh Rajesh Mishra
Father's Name: Rajesh Mishra
House Number : 5170
Age : 37 Gender : Male
Photo Available

232 BKG0966663
Name : Prashant Ishwar Dhavde
Father's Name: Ishwar Dhavde
House Number : 6 128
Age : 47 Gender : Male
Photo Available

233 BKG0966457
Name : Sheetal Prashant Dhavde
Husband's Name: Prashant Dhavde
House Number : 6 128
Age : 47 Gender : Female
Photo Available

234 BKG0966804
Name : Mukesh Ishwar Dhavde
Father's Name: Ishwar Dhavde
House Number : 6 128
Age : 45 Gender : Male
Photo Available

235 AIS0101381
Name : Ishwar Kashinath Dhavde
Father's Name: Kashinath Dhavde
House Number : 6128
Age : 78 Gender : Male
Photo Available

236 AIS0101391
Name : Ranjana Ishwar Dhavde
Husband's Name: Ishwar Dhavde
House Number : 6128
Age : 68 Gender : Female
Photo Available

237 AIS8187890
Name : Umadevi Ishwar Dhavde
Father's Name: Ishwar Dhavde
House Number : 6128
Age : 51 Gender : Female
Photo Available

238 AIS2258499
Name : Gitanjali Ram Korake
Husband's Name: Ram Korake
House Number : 6 129
Age : 52 Gender : Female
Photo Available

239 AIS8442121
Name : MANSI KORKE
Father's Name: RAM KORKE
House Number : 6/129
Age : 23 Gender : Female
Photo Available

240 AIS8187916
Name : Indubai Vinayak Korake
Husband's Name: Vinayak Korake
House Number : 6129
Age : 77 Gender : Female
Photo Available

241 BKG2326577
Name : Ram Vinayak Korake
Father's Name: Vinayak Korake
House Number : 6129
Age : 57 Gender : Male
Photo Available

242 AIS0101444
Name : Laxmi Amarnath Jaiswal
Husband's Name: Amarnath Jaiswal
House Number : 6131
Age : 64 Gender : Female
Photo Available

243 AIS6503189
Name : Rina Premnath Jaiswal
Husband's Name: Premnath Jaiswal
House Number : 6131
Age : 46 Gender : Female
Photo Available

244 AIS6637623
Name : Teena Prakash Jaiswal
Husband's Name: Prakash Jaiswal
House Number : 6-131
Age : 43 Gender : Female
Photo Available

245 AIS7877335
Name : KALYANI ABHAY KHASALE
Father's Name: ABHAY KHASALE
House Number : 6/132
Age : 29 Gender : Female
Photo Available

246 AIS8035115
Name : SHARVARI KHASALE
Father's Name: ABHAY KHASALE
House Number : 6/132
Age : 25 Gender : Female
Photo Available

247 AIS8441966
Name : SHANTANU KHASALE
Father's Name: ABHAY KHASALE
House Number : 6/132
Age : 25 Gender : Male
Photo Available

248 AIS7325533
Name : Vrushali Rahul Deshmukh
Husband's Name: Rahul Deshmukh
House Number : 6/134
Age : 45 Gender : Female
Photo Available

249 AIS7325541
Name : Kuntal Pavan Deshmukh
Husband's Name: Pavan Deshmukh
House Number : 6/134
Age : 36 Gender : Female
Photo Available

250 AIS8615296
Name : ASHWINI WADHAI
Father's Name: PRAKASH WADHAI
House Number : 6/135
Age : 26 Gender : Female
Photo Available

251 AIS8567612
Name : SHIVANI WADHAI
Father's Name: PRAKESH WADHAI
House Number : QRT 6/135
Age : 28 Gender : Female
Photo Available

252 AIS1382621
Name : Shubhangi Gunavat Radhute
Husband's Name: Gunavat Radhute
House Number : 8115
Age : 42 Gender : Female
Photo Available

253 AIS6637649
Name : Jayanil Ashok Gunarakar
Father's Name: Ashok Gunarakar
House Number : 8128
Age : 40 Gender : Male
Photo Available

254 AIS6637631
Name : Neeta Shrinkat Vankhede
Husband's Name: Shrinkat Vankhede
House Number : 8128
Age : 49 Gender : Female
Photo Available

255 AIS1382647
Name : Renu Neelkanth Jaisawal
Husband's Name: Neelkanth Jaisawal
House Number : 8142
Age : 42 Gender : Female
Photo Available

256 AIS4856720
Name : Seema Shrikant Joshi
Husband's Name: Shrikant Joshi
House Number : 1/I1/7/12
Age : 46 Gender : Female
Photo Available

257 AIS6637243
Name : Prabhakar Devnath Dani
Father's Name: Devnath Dani
House Number : 132/b/13
Age : 64 Gender : Male
Photo Available

258 AIS6637250
Name : Asha Prabhakar Dani
Husband's Name: Prabhakar Dani
House Number : 132/b/13
Age : 63 Gender : Female
Photo Available

259 AIS7325566
Name : Jayant Devchand Dandare
Father's Name: Devchand Dandare
House Number : 16/8/8/3
Age : 51 Gender : Male
Photo Available

260 AIS7325558
Name : Rita Jayant Dandare
Husband's Name: Jayant Dandare
House Number : 16/8/8/3
Age : 50 Gender : Female
Photo Available

261 AIS3500485
Name : Milind Sharad Chandra Shewatkar
Father's Name: Sharad Chandra Shewatkar
House Number : 5 6 132
Age : 59 Gender : Male
Photo Available

262 AIS3500493
Name : Bharti Milind Shewatkar
Husband's Name: Milind Shewatkar
House Number : 5 6 132
Age : 47 Gender : Female
Photo Available

263 AIS7877186
Name : JAYASHRI MUKESH DHAWDE
Husband's Name: MUKESH DHAWDE
House Number : 61128
Age : 36 Gender : Female
Photo Available

264 AIS8056269
Name : Vedant Band
Father's Name: Pramod Band
House Number : Qtr. no. L-7-10/12
Age : 28 Gender : Male
Photo Available

265 AIS1382373
Name : Shalini Suresh Chopade
Husband's Name: Suresh Chopade
House Number : 132/167
Age : 62 Gender : Female
Photo Available

266 AIS1382381
Name : Suresh Radhobaji Chopade
Father's Name: Radhobaji Chopade
House Number : 132/637
Age : 66 Gender : Male
Photo Available

267 AIS2265882
Name : Dharmika Prakash Mankar
Husband's Name: Prakash Mankar
House Number : 18/14c16
Age : 40 Gender : Female
Photo Available

268 AIS4856589
Name : Tushar Prabhudas Singamavar
Father's Name: Prabhudas Singamavar
House Number : 361/302
Age : 51 Gender : Male
Photo Available

269 AIS4856571
Name : Manali Tushar Singamavar
Husband's Name: Tushar Singamavar
House Number : 361/302
Age : 44 Gender : Female
Photo Available

270 AIS5295902
Name : Rasiq Amritlal Kariya
Father's Name: Amritlal Kariya
House Number : 361/601
Age : 51 Gender : Male
Photo Available

271 AIS5295910
Name : Sangeeta Rasiq Kariya
Husband's Name: Rasiq Kariya
House Number : 361/601
Age : 50 Gender : Female
Photo Available

272 AIS8745770
Name : AARYAN MANOJ KHEKRE
Father's Name: MANOJ KHEKRE
House Number : L 7/12 - 12
Age : 21 Gender : Male
Photo Available

273 AIS8748311
Name : Sahil Shrikant Wankhede
Father's Name: Shrikant Wankhede
House Number : Plot no.L-8/28
Age : 21 Gender : Male
Photo Available

274 AIS8805608
Name : BHUPENDRA DEEPAK MISAL
Father's Name: DEEPAK MISAL
House Number : 162/4
Age : 30 Gender : Male
Photo Available

275 AIS8805632
Name : URMILA DEEPAK MISAL
Father's Name: DEEPAK MISAL
House Number : 162/4
Age : 31 Gender : Female
Photo Available

276 AIS8821183
Name : DEWANG MANKAR
Father's Name: PRAKASH MANKAR
House Number : PLOT NO.L 8/14/16
Age : 22 Gender : Male
Photo Available

277 AIS8823387
Name : NUTAN MENDHE
Husband's Name: POONAM MENDHE
House Number : PLOT NO.60
Age : 33 Gender : Female
Photo Available

278 AIS8828121
Name : ANURAG MILIND SEWATKAR
Father's Name: MILIND SEWATKAR
House Number : 401
Age : 23 Gender : Male
Photo Available

279 AIS8855850
Name : NAYAN SANJAY DHOTE
Father's Name: SANJAY DHOTE
House Number : 4/143
Age : 21 Gender : Female
Photo Available

280 AIS8865909
Name : KIRAN MALKU ATARAM
Others: GAURI KIRAN ATARAM
House Number : RAGHUJI NAGAR
Age : 30 Gender : Male
Photo Available

281 AIS8906836
Name : Kunal Deepak Shahu
Mother's Name: Pratibha Shahu
House Number : 443
Age : 25 Gender : Male
Photo Available

282 AIS8909343
Name : Mandar Nitin Petkar
Father's Name: Nitin Suresh Petkar
House Number : L.8/27
Age : 22 Gender : Male
Photo Available

283 AIS8940645
Name : Radhika Nitin Petkar
Father's Name: Nitin Suresh Petkar
House Number : L.8/27
Age : 24 Gender : Female
Photo Available

284 AIS8942708
Name : Gandharv Prashant Dhawade
Mother's Name: Shital Prashant Dhawade
House Number : QUARTER NO. 6/128
Age : 22 Gender : Male
Photo Available

285 AIS8979361
Name : Ashish Himmat Meshram
Father's Name: Himmat Meshram
House Number : Flat 501, N. I. T. Housing C
Age : 30 Gender : Male
Photo Available

286 AIS8976433
Name : Vaishnav Prakash Sawwalakhe
Mother's Name: SUNITA SAWWALAKHE
House Number : Qtr. No. 1/128
Age : 23 Gender : Male
Photo Available

287 AIS9014598
Name : MEENA VILAS KAYANDE
Husband's Name: VILAS KAYANDE
House Number : L-8/25
Age : 59 Gender : Female
Photo Available

288 AIS9037102
Name : YOGITA DEVIDAS BHALME
Husband's Name: DEVIDAS BHALME
House Number : 50/1
Age : 50 Gender : Female
Photo Available

289 AIS9017260
Name : SULOCHANA BAPURAO SAVVALAKHE
Husband's Name: BAPURAO SAVVALAKHE
House Number : 1/128
Age : 80 Gender : Female
Photo Available

290 AIS9029042
Name : SAPNA RAJESH SHENDE
Husband's Name: RAJESH SHENDE
House Number : 3/134
Age : 35 Gender : Female
Photo Available

291 AIS9020785
Name : RINKU RAHUL INGLE
Husband's Name: RAHUL INGLE
House Number : 166/2
Age : 31 Gender : Female
Photo Available

292 AIS9021742
Name : SHRIKANT UMAKANT BANODE
Others: SHRIKANT BANODE
House Number : 4
Age : 27 Gender : Male
Photo Available

293 AIS9045048
Name : ASHA CHANDRAKANT BANODE
Husband's Name: CHANDRAKANT BANODE
House Number : 4/132
Age : 68 Gender : Female
Photo Available

294 AIS9096173
Name : Yash Govinda Manekar
Father's Name: Govinda Manekar
House Number : Govinda Manekar 10/F, Ayurved
Age : 20 Gender : Male
Photo Available

295 AIS9241381
Name : GAYATRI NIKHIL VYAS
Mother's Name: MADHURA NIKHIL VYAS
House Number : A/11, 76 M I G FLATS
Age : 20 Gender : Female
Photo Available

296 AIS9436569
Name : RAKIB GAZI
Father's Name: SAHAJAN GAZI
House Number : B/H-365
Age : 34 Gender : Male
Photo Available

297 AIS7408180
Name : Ragini Sachin Chaudhary
Husband's Name: Sachin Chaudhary
House Number :
Age : 46 Gender : Female
Photo Available

298 AIS7538259
Name : APURVA SANJAY DHGE
Father's Name: SANJAY DHGE
House Number :
Age : 30 Gender : Female
Photo Available

299 AIS6844849
Name : SULEKHA SATISH Jachak
Husband's Name: SATISH Jachak
House Number :
Age : 66 Gender : Female
Photo Available

300 AIS6844831
Name : ANITA PURUSHOTTAM NAIK
Husband's Name: PURUSHOTTAM NAIK
House Number :
Age : 34 Gender : Female
Photo Available

301 AIS1382712
Name : Vasant Premlal Shahu
Father's Name: Premlal Shahu
House Number : 3
Age : 69 Gender : Male
Photo Available

302 AIS1382738
Name : Saroj Shivkumar Shahu
Husband's Name: Shivkumar Shahu
House Number : 3
Age : 54 Gender : Female
Photo Available

303 AIS0101579
Name : Nandkishore Premlal Shahu
Father's Name: Premlal Shahu
House Number : 3
Age : 54 Gender : Male
Photo Available

304 AIS1382746
Name : Vishakha Nandkishore Shahu
Husband's Name: Nandkishore Shahu
House Number : 3
Age : 50 Gender : Female
Photo Available

305 AIS1382753
Name : Abhijeet Vasant Rao Shahu
Father's Name: Vasanatarav Shahu
House Number : 3
Age : 42 Gender : Male
Photo Available

306 AIS6637722
Name : Sarita Umakant Banode
Husband's Name: Umakant Banode
House Number : 4
Age : 58 Gender : Female
Photo Available

307 AIS7165871
Name : Meghna Amit Gore
Husband's Name: Amit Gore
House Number : 8
Age : 46 Gender : Female
Photo Available

308 AIS7877178
Name : RUCHIKA VIJAY PAIGWAR
Father's Name: VIJAY PAIGWAR
House Number : 10-A
Age : 27 Gender : Female
Photo Available

309 AIS6638530
Name : Aparna Janardhan Gurao
Husband's Name: Janardhan Gurao
House Number : 1,L/8
Age : 67 Gender : Female
Photo Available

310 AIS7845522
Name : Shivani Avinash Bansod
Father's Name: Avinash Bansod
House Number : 50
Age : 28 Gender : Female
Photo Available

311 AIS8380982
Name : ADVAIT JANAI
Father's Name: MILIND JANAI
House Number : EWS 68
Age : 25 Gender : Male
Photo Available

312 AIS1382795
Name : Pratibha Waman Bangare
Husband's Name: Waman Bangare
House Number : 81
Age : 86 Gender : Female
Photo Available

313 AIS0101600
Name : Prakash Chandrahas Devate
Father's Name: Chandrahas Devate
House Number : 8 4
Age : 71 Gender : Male
Photo Available

314 AIS0101618
Name : Vikas Chandrahas Devate
Father's Name: Chandrahas Devate
House Number : 8 4
Age : 68 Gender : Male
Photo Available

315 AIS0101626
Name : Neelema Vikas Devate
Husband's Name: Vikas Devate
House Number : 84
Age : 63 Gender : Female
Photo Available

316 AIS6637763
Name : Suresh Raut
Father's Name: Keshav Rao Raut
House Number : 87
Age : 79 Gender : Male
Photo Available

317 AIS6637771
Name : Suresh Raut
Husband's Name: Raut
House Number : 87
Age : 70 Gender : Female
Photo Available

318 AIS6637797
Name : Manjiri Milind Moghe
Husband's Name: Milind Moghe
House Number : NEAR REGISTER OFFICE L-8/9 HO
Age : 59 Gender : Female
Photo Available

319 AIS7165889
Name : Srushtita Prabhakar Dani
Father's Name: Prabhakar Dani
House Number : 132
Age : 31 Gender : Female
Photo Available

320 AIS7165731
Name : Prajakta Shankarrao Kewate
Father's Name: Shankarrao Kewate
House Number : 1/70
Age : 62 Gender : Female
Photo Available

321 AIS6973390
Name : Payal Tita Ingale
Mother's Name: Tita Ingale
House Number : 4/20
Age : 32 Gender : Female
Photo Available

322 AIS7825763
Name : Swapnil Hansraj Gadiwan
Father's Name: Hansraj Gadiwan
House Number : 4/91
Age : 34 Gender : Male
Photo Available

323 AIS7408172
Name : Vaishnavi Ashok Kharate
Father's Name: Ashok Khrate
House Number : 506
Age : 31 Gender : Female
Photo Available

324 AIS7408198
Name : Sarla paresh Jhaveri
Husband's Name: paresh Jhveri
House Number : 5/66
Age : 47 Gender : Female
Photo Available

325 AIS7408206
Name : Sushila Raghvan Kannan
Husband's Name: Raghvan Kannan
House Number : 5/66
Age : 72 Gender : Female
Photo Available

326 AIS6637805
Name : Manju Baldevprasad Mishra
Father's Name: Baldevprasad Mishra
House Number : 570
Age : 55 Gender : Female
Photo Available

327 AIS0101931
Name : Rajshekhar Gajanan Bhide
Father's Name: Gajanan Bhide
House Number : L8/11
Age : 65 Gender : Male
Photo Available

328 AIS6637755
Name : Varsha Rajshekhar Bhide
Father's Name: Rajshekhar Bhide
House Number : L8/11
Age : 61 Gender : Female
Photo Available

329 AIS7672488
Name : Chinmay Rajshekhar Bhide
Father's Name: Rajshekhar Bhide
House Number : L8/11
Age : 28 Gender : Male
Photo Available

330 AIS1382829
Name : Hemlata Nanaji Dhavangale
Husband's Name: Nanaji Dhavangale
House Number : 813
Age : 75 Gender : Female
Photo Available

331 AIS1382837
Name : Ajay Nanaji Dhavangale
Father's Name: Nanaji Dhavangale
House Number : 813
Age : 53 Gender : Male
Photo Available

332 AIS1382852
Name : Archana Avinash Vyas
Husband's Name: Avinash Vyas
House Number : 816
Age : 64 Gender : Female
Photo Available

333 AIS0101741
Name : Vishakha Vinod Ailakunchavar
Husband's Name: Vinod Ailakunchavar
House Number : 822
Age : 64 Gender : Female
Photo Available

334 AIS2392397
Name : Praveen Yashwant Pawar
Father's Name: Yashwant Pawar
House Number : 823
Age : 53 Gender : Male
Photo Available

335 AIS0102012
Name : Prabhatai Sudam Devate
Husband's Name: Sudam Devate
House Number : 837
Age : 80 Gender : Female
Photo Available

336 AIS0102020
Name : Sunil Sudam Devate
Father's Name: Sudam Devate
House Number : 837
Age : 52 Gender : Male
Photo Available

337 AIS0102046
Name : Devendra Vitththal Rao Dhage
Father's Name: Vitththal Rao Dhage
House Number : 838
Age : 57 Gender : Male
Photo Available

338 AIS8679342
Name : APARNA DEVENDRA DHAGE
Husband's Name: DEVENDRA DHAGE
House Number : L-8/38
Age : 51 Gender : Female
Photo Available

339 AIS8188054
Name : Madhusudan Bhaskar Kolarkar
Father's Name: Bhaskar Kolarkar
House Number : 841
Age : 84 Gender : Male
Photo Available

340 AIS0101787
Name : Praveen Purushottam Laturkar
Father's Name: Purushottam Laturkar
House Number : 841
Age : 56 Gender : Male
Photo Available

341 AIS0101777
Name : Neha Praveen Laturkar
Husband's Name: Praveen Laturkar
House Number : 841
Age : 54 Gender : Female
Photo Available

342 AIS1382886
Name : Anjali Sham Kumar Jaiswal
Husband's Name: Sham Kumar Jaiswal
House Number : 842
Age : 70 Gender : Female
Photo Available

343 AIS1382894
Name : Neelkanth Sham Kumar Jaiswal
Father's Name: Sham Kumar Jaiswal
House Number : 842
Age : 50 Gender : Male
Photo Available

344 AIS1437276
Name : Shilakant Sham Kumar Jaiswal
Father's Name: Sham Kumar Jaiswal
House Number : 842
Age : 49 Gender : Male
Photo Available

345 AIS7165830
Name : Sneha Satish Satav
Husband's Name: Satish Satav
House Number : 1/130
Age : 35 Gender : Female
Photo Available

346 AIS3506250
Name : Nirmala Ramesh Joshi
Husband's Name: Ramesh Joshi
House Number : 12 7 1
Age : 74 Gender : Female
Photo Available

347 AIS6638050
Name : Sheela Ashok Joshi
Husband's Name: Ashok Joshi
House Number : 12-7-1
Age : 70 Gender : Female
Photo Available

348 AIS6638068
Name : Vaibhav Ashok Joshi
Father's Name: Ashok Joshi
House Number : 12-7-1
Age : 45 Gender : Male
Photo Available

349 AIS8695363
Name : Sanket Ravindra Khasale
Father's Name: Ravindra Khasale
House Number : 132/6
Age : 35 Gender : Male
Photo Available

350 AIS6637995
Name : Dhananjay Purushottam Moghe
Father's Name: Purushottam Moghe
House Number : 1-8-12
Age : 62 Gender : Male
Photo Available

351 AIS0101559
Name : Asha Narayan Raghute
Husband's Name: Narayan Raghute
House Number : 1-815
Age : 66 Gender : Female
Photo Available

352 AIS6637698
Name : GUNWANT RAGHUTE
Father's Name: Narayan Raghute
House Number : 1-815
Age : 50 Gender : Male
Photo Available

353 AIS1382878
Name : Pranav Vinod Ailakunchavar
Father's Name: Vinod Ailakunchavar
House Number : 1 8 22
Age : 42 Gender : Male
Photo Available

354 AIS6638001
Name : Yogita Sunil Devate
Husband's Name: Sunil Devate
House Number : 1-8-37
Age : 49 Gender : Female
Photo Available

355 AIS6638019
Name : Rudrakumar Vitththal Rao Dhage
Father's Name: Vitththal Rao Dhage
House Number : 1-8-38
Age : 60 Gender : Male
Photo Available

356 AIS6638027
Name : Sunanda Rudrakumar Dhage
Husband's Name: Rudrakumar Dhage
House Number : 1-8-38
Age : 60 Gender : Female
Photo Available

357 AIS6638035
Name : Smita Chandrashekhar Sathe
Husband's Name: Chandrashekhar Sathe
House Number : 1-8-38
Age : 58 Gender : Female
Photo Available

358 AIS6638043
Name : Sanjeevani Bhalchandra Sathe
Father's Name: Bhalchandra Sathe
House Number : 1-8-40
Age : 71 Gender : Female
Photo Available

359 AIS0102062
Name : Chandrashekhar Bhalchandra Sathe
Father's Name: Bhalchandra Sathe
House Number : 1-8-40
Age : 68 Gender : Male
Photo Available

360 AIS6637854
Name : Maya Devendra Dhomane
Husband's Name: Devendra Dhomane
House Number : 2128
Age : 76 Gender : Female
Photo Available

361 AIS0101808
Name : Devendra Vasudev Dhomane
Father's Name: Vasudev Dhomane
House Number : 2128
Age : 58 Gender : Male
Photo Available

362 AIS8658569
Name : Vaishali Wadandre
Husband's Name: Sanjay Wadandre
House Number : 2/130
Age : 46 Gender : Female
Photo Available

363 AIS6637862
Name : Murlidhar Ganpat Vadadre
Father's Name: Ganpat Vadadre
House Number : 2130
Age : 90 Gender : Male
Photo Available

364 BKG0356717
Name : Sanjay Murlidhar Vadadre
Father's Name: Murlidhar Vadadre
House Number : 2130
Age : 52 Gender : Male
Photo Available

365 AIS7408164
Name : Rinki Krunal Gadve
Husband's Name: Kunal Gadave
House Number : 2/135
Age : 37 Gender : Female
Photo Available

366 AIS7165806
Name : Vaibhavi Janardhan Suparkar
Father's Name: Janardhan Suparkar
House Number : 2/231
Age : 34 Gender : Female
Photo Available

367 AIS7165848
Name : Vikram Suresh Chopade
Father's Name: Suresh Chopade
House Number : 3/130
Age : 34 Gender : Male
Photo Available

368 BKG0966655
Name : Chitra Sanjay Polakade
Husband's Name: Sanjay Polakade
House Number : 3 132
Age : 49 Gender : Female
Photo Available

369 AIS7845555
Name : Kaustubh Sanjay Polkade
Father's Name: Sanjay Polkade
House Number : 3/132
Age : 27 Gender : Male
Photo Available

370 BKG0965897
Name : Rajesh Mahipatrao Shende
Father's Name: Mahipatrao Shende
House Number : 3 134
Age : 43 Gender : Male
Photo Available

371 AIS0101832
Name : Lata Mahipat Shende
Husband's Name: Mahipat Shende
House Number : 3134
Age : 65 Gender : Female
Photo Available

372 AIS6637706
Name : Rahul Subhasharav Deshmukh
Father's Name: Subhasharav Deshmukh
House Number : 3-134
Age : 45 Gender : Male
Photo Available

373 AIS1382761
Name : Shalini Bhayyaji Nimkar
Husband's Name: Bhayyaji Nimkar
House Number : 3 135
Age : 57 Gender : Female
Photo Available

374 AIS1382910
Name : Bhaiyyaji Punaji Nimkar
Father's Name: Punaji Nimkar
House Number : 3135
Age : 67 Gender : Male
Photo Available

375 AIS7165764
Name : Sanjay Wamanrao Polkade
Father's Name: Wamanrao Polkade
House Number : 3/132 Raghuji Nagar
Age : 63 Gender : Male
Photo Available

376 AIS6637888
Name : Sangeeta Madhav Nakatode
Husband's Name: Madhav Nakatode
House Number : 4128
Age : 64 Gender : Female
Photo Available

377 AIS1382936
Name : Ratnamala Tulsiram Kurve
Husband's Name: Tulsiram Kurve
House Number : 4129
Age : 78 Gender : Female
Photo Available

378 AIS8189565
Name : Tajakrupa Tulsiram Kurve
Father's Name: Tulsiram Kurve
House Number : 4129
Age : 62 Gender : Male
Photo Available

379 AIS8189557
Name : Jalandhar Tulsiram Kurve
Father's Name: Tulsiram Kurve
House Number : 4129
Age : 54 Gender : Male
Photo Available

380 AIS1382944
Name : Vijaya Tulsiram Kurve
Father's Name: Tulsiram Kurve
House Number : 4129
Age : 48 Gender : Female
Photo Available

381 AIS6637896
Name : Shakuntala Ram Narayan Banode
Husband's Name: Ram Narayan Banode
House Number : 4132
Age : 95 Gender : Female
Photo Available

382 AIS8189573
Name : Laxmikant Ram Narayan Banode
Father's Name: Ram Narayan Banode
House Number : 4132
Age : 70 Gender : Male
Photo Available

383 AIS8189581
Name : Laxmi Laxmikant Banode
Husband's Name: Laxmikant Banode
House Number : 4132
Age : 60 Gender : Female
Photo Available

384 BKG0966721
Name : Vijay Purushottam Khasale
Father's Name: Purushottam Khasale
House Number : 4132
Age : 56 Gender : Male
Photo Available

385 BKG0966671
Name : Vaishali Vijay Rao Khasale
Husband's Name: Vijay Rao Khasale
House Number : 4132
Age : 49 Gender : Female
Photo Available

386 BKG0965277
Name : Neha Narendra Raut
Husband's Name: Narendra Raut
House Number : 4 133
Age : 48 Gender : Female
Photo Available

387 BKG0356873
Name : Narendra Prabhakar Raut
Father's Name: Prabhakar Raut
House Number : 4133
Age : 55 Gender : Male
Photo Available

388 BKG2274207
Name : Aruna Pramod Deshmukh
Husband's Name: Pramod Deshmukh
House Number : 4 135
Age : 56 Gender : Female
Photo Available

389 AIS0101599
Name : Pramod Vishwas Deshmukh
Father's Name: Vishwas Deshmukh
House Number : 4-135
Age : 60 Gender : Male
Photo Available

390 BKG2273795
Name : Nirmala Punamdas Chaudhary
Husband's Name: Punamdas Chaudhary
House Number : 5128
Age : 79 Gender : Female
Photo Available

391 AIS6637938
Name : Sindhu Dinkar Kende
Husband's Name: Dinkar Kende
House Number : 5130
Age : 72 Gender : Female
Photo Available

392 AIS0101907
Name : Rajesh Dinkar Kende
Father's Name: Dinkar Kende
House Number : 5130
Age : 51 Gender : Male
Photo Available

393 AIS0101915
Name : Abhay Dinkar Kende
Father's Name: Dinkar Kende
House Number : 5130
Age : 49 Gender : Male
Photo Available

394 AIS6637730
Name : Sanjay Dinakarrao Kende
Father's Name: Dinakarrao Kende
House Number : 5-130
Age : 48 Gender : Male
Photo Available

395 AIS6637748
Name : Manjusha Dinakarrao Kende
Husband's Name: Dinakarrao Kende
House Number : 5-130
Age : 45 Gender : Female
Photo Available

396 BKG0787986
Name : Pushpa Prakash Dhole
Husband's Name: Prakash Dhole
House Number : 5133
Age : 61 Gender : Female
Photo Available

397 BKG2267789
Name : Mangesh Mahadev Jayasawal
Father's Name: Mahadev Jayasawal
House Number : 6 133
Age : 43 Gender : Male
Photo Available

398 AIS6637953
Name : Shobha Mahadev Jaiswal
Husband's Name: Mahadev Jaiswal
House Number : 6133
Age : 70 Gender : Female
Photo Available

399 AIS6637961
Name : Nagesh Mahadeo Jaiswal
Father's Name: Mahadev Jaiswal
House Number : 6133
Age : 51 Gender : Male
Photo Available

400 AIS6637979
Name : Subhash Purushottam Deshmukh
Father's Name: Purushottam Deshmukh
House Number : 6134
Age : 69 Gender : Male
Photo Available

401 AIS6637714
Name : Pawan Subhasharav Deshmukh
Father's Name: Subhasharav Deshmukh
House Number : 6-134
Age : 43 Gender : Male
Photo Available

402 BKG2274215
Name : Pushpa Prakashrao Vadhai
Husband's Name: Prakashrao Vadhai
House Number : 6 135
Age : 50 Gender : Female
Photo Available

403 BKG0965970
Name : Prakash Laxman Vadhai
Father's Name: Laxman Vadhai
House Number : 6/135
Age : 56 Gender : Male
Photo Available

404 AIS6638092
Name : Parikshit Vaman Rao Desai
Father's Name: Vaman Rao Desai
House Number : 8-4-70
Age : 46 Gender : Male
Photo Available

405 AIS6638100
Name : Chetan Vaman Rao Desai
Father's Name: Vaman Rao Desai
House Number : 8-4-70
Age : 43 Gender : Male
Photo Available

406 AIS6638076
Name : Shrikant Ramesh Joshi
Father's Name: Ramesh Joshi
House Number : 12-17-1
Age : 53 Gender : Male
Photo Available

407 AIS7325723
Name : Manisha Dilip Atkare
Father's Name: Dilip Atkare
House Number : 16/L-8/10
Age : 34 Gender : Female
Photo Available

408 AIS1382860
Name : Amol Avinash Vyas
Father's Name: Avinash Vyas
House Number : 1 8 17 3
Age : 42 Gender : Male
Photo Available

409 BKG0966648
Name : Vaishali Abhay Khasale
Husband's Name: Abhay Khasale
House Number : 5 6 132
Age : 49 Gender : Female
Photo Available

410 AIS0102082
Name : Sangeeta Ravindra Khasale
Husband's Name: Ravindra Khasale
House Number : 5 6132
Age : 57 Gender : Female
Photo Available

411 AIS0102092
Name : Ravindra Rambhau Khasale
Father's Name: Rambhau Khasale
House Number : 5-6-132
Age : 62 Gender : Male
Photo Available

412 AIS0102103
Name : Abhay Rambhau Khasale
Father's Name: Rambhau Khasale
House Number : 5-6-132
Age : 57 Gender : Male
Photo Available

413 AIS0102129
Name : Gajanan Abaji Bhide
Father's Name: Abaji Bhide
House Number : L-8-44/11
Age : 91 Gender : Male
Photo Available

414 AIS8773731
Name : PALLAVI HOMESHWAR FASATE
Father's Name: HOMESHWAR FASATE
House Number : QUARTER NO. 6/35
Age : 21 Gender : Female
Photo Available

415 AIS8845281
Name : Sunanda Vijayrao Ambagade
Husband's Name: Vijay Namdeorao Ambagade
House Number : 21,Sabhasad Sahaniwas
Age : 56 Gender : Female
Photo Available

416 AIP4093100
Name : Mahendra Tukaram Khammbatakar
Father's Name: Tukaram Khammbatakar
House Number : 309 N.I.T. COMPLEX
Age : 38 Gender : Male
Photo Available

417 AIS8848616
Name : AYUSH SAYWAN
Father's Name: DEEPAKRAO SAYWAN
House Number : QTR NO 1/132
Age : 22 Gender : Male
Photo Available

418 AIS8849085
Name : PARTHAVI NARKHEDKAR
Father's Name: AMOL NARKHEDKAR
House Number : QTR NO 3/61
Age : 20 Gender : Female
Photo Available

419 AIS8857559
Name : ABHA NAGESH JAISWAL
Husband's Name: NAGESH MAHADEO JAISWAL
House Number : W/O NAGESH JAISWAL
Age : 46 Gender : Female
Photo Available

420 AIS8866352
Name : Neha Wadandre
Father's Name: Sanjay Wadandre
House Number : 2/130
Age : 21 Gender : Female
Photo Available

421 AIS8888752
Name : Sunil Vedmitra Bajaj
Father's Name: Vedmitra Bajaj
House Number : Plot no. 21
Age : 66 Gender : Male
Photo Available

422 AIS8892788
Name : Kajal Sunil Bajaj
Husband's Name: Sunil Bajaj
House Number : Plot no. 21
Age : 63 Gender : Female
Photo Available

423 AIS8916512
Name : SWAPNIL SUBHASH DESHMUKH
Father's Name: SUBHASH PURUSHOTTAM DESHMUKH
House Number : plot no 6/134 mauli krupa
Age : 40 Gender : Male
Photo Available

424 AIS8951055
Name : SAMRADNI SWAPNIL DESHMUKH
Husband's Name: SWAPNIL SUBHASH DESHMUKH
House Number : plot no 6/134 mauli krupa
Age : 45 Gender : Female
Photo Available

425 AIS8996902
Name : MAHESH SHRIVAS
Father's Name: SHIVCHARAN SHRIVAS
House Number : Plot 103, Raghuji Nagar
Age : 49 Gender : Male
Photo Available

426 AIS9116757
Name : Parth Sunil Deote
Father's Name: Sunil Deote
House Number : Quater No L-8/37
Age : 21 Gender : Male
Photo Available

427 AIP7319676
Name : Ujwala Bhojraj Katole
Husband's Name: Bhojraj Katole
House Number : A305
Age : 59 Gender : Female
Photo Available

428 AIP7319668
Name : Bhojraj Chandrabhan Katole
Father's Name: Chandrabhan Katole
House Number : 305
Age : 69 Gender : Male
Photo Available

429 ABK1626738
Name : MAMTA GHORPADE
Husband's Name: DEVENDRA GHORPADE
House Number : 5/10
Age : 42 Gender : Female
Photo Available

430 AIS6844823
Name : KIRAN PRAVIN GADVE
Husband's Name: PRAVIN GADVE
House Number :
Age : 46 Gender : Female
Photo Available

431 AIS6973333
Name : Rashmi Janardan Gurav
Father's Name: Janardan Gurav
House Number : 1
Age : 39 Gender : Female
Photo Available

432 AIS8020836
Name : LAXMI GOVINDA MANEKAR
Husband's Name: Govinda Manekar
House Number : 10/f Ayurvedic Layout
Age : 42 Gender : Female
Photo Available

433 AIS6973382
Name : Akanksha Rita Ingale
Mother's Name: Rita Ingale
House Number : 20
Age : 31 Gender : Female
Photo Available

434 AIS6973507
Name : Arti Vijay Mahatme
Father's Name: Vijay Mahatme
House Number : 20
Age : 31 Gender : Female
Photo Available

435 AIS6973440
Name : Anjali Tilak Gupta
Father's Name: Tilak Gupta
House Number : 35
Age : 31 Gender : Female
Photo Available

436 AIS8545022
Name : SAVITA BAVNE
Husband's Name: DHANRAJ BAVNE
House Number : 97
Age : 40 Gender : Female
Photo Available

437 AIS2259489
Name : Sanjay Madhukar Mahakalakar
Father's Name: Madhukar Mahakalakar
House Number : 97
Age : 51 Gender : Male
Photo Available

438 AIS6638175
Name : Ajay Madhukar Mahakalakar
Father's Name: Madhukar Mahakalakar
House Number : 97
Age : 49 Gender : Male
Photo Available

439 AIS7142748
Name : Roopali Madhusudan Mahakalakar
Father's Name: Madhusudan Mahakalakar
House Number : 97
Age : 45 Gender : Female
Photo Available

440 AIS6638183
Name : PRIYA Sanjay MAHAKALKAR
Husband's Name: Sanjay Mahakalakar
House Number : 97
Age : 47 Gender : Female
Photo Available

441 AIS8538274
Name : ARYA MAHAKALKAR
Father's Name: AJAY MAHAKALKAR
House Number : PLOT NO 97
Age : 23 Gender : Female
Photo Available

442 AIS0102151
Name : Dilip Atmaram Korde
Father's Name: Atmaram Korde
House Number : 98
Age : 68 Gender : Male
Photo Available

443 AIS6638209
Name : Shrikant Atmaram Korde
Father's Name: Atmaram Korde
House Number : 98
Age : 57 Gender : Male
Photo Available

444 AIS6638191
Name : Vaishali Atmaram Korde
Father's Name: Atmaram Korde
House Number : 98
Age : 54 Gender : Female
Photo Available

445 AIS0102161
Name : Anita Dilip Korde
Husband's Name: Dilip Korde
House Number : 98
Age : 54 Gender : Female
Photo Available

446 AIS6638217
Name : Jayashri Shrikant Korde
Husband's Name: Shrikant Korde
House Number : 98
Age : 47 Gender : Female
Photo Available

447 AIS6638233
Name : Subhash Gangaram Bhusari
Father's Name: Gangaram Bhusari
House Number : 99
Age : 62 Gender : Male
Photo Available

448 AIS0102171
Name : Sunita Subhash Bhusari
Husband's Name: Subhash Bhusari
House Number : 99
Age : 54 Gender : Female
Photo Available

449 AIS6973465
Name : Surbhi Subhash Bhusari
Father's Name: Subhash Bhusari
House Number : 99
Age : 31 Gender : Female
Photo Available

450 AIS7569171
Name : Surekha Pandurang Kadu
Husband's Name: Pandurang Kadu
House Number : 100
Age : 77 Gender : Female
Photo Available

451 AIS0102202
Name : Sushila Shriram Kadu
Husband's Name: Shriram Kadu
House Number : 100
Age : 65 Gender : Female
Photo Available

452 AIS0102210
Name : Sheela Jairam Kadu
Husband's Name: Jairam Kadu
House Number : 100
Age : 65 Gender : Female
Photo Available

453 AIS1383009
Name : Rajendra Dayaram Kadu
Father's Name: Dayaram Kadu
House Number : 100
Age : 56 Gender : Male
Photo Available

454 AIS1383017
Name : Vidhya Rajesh Kadu
Husband's Name: Rajesh Kadu
House Number : 100
Age : 47 Gender : Female
Photo Available

455 AIS7325731
Name : Harshad Pandurangji Kadu
Father's Name: Pandurangji Kadu
House Number : 100
Age : 34 Gender : Male
Photo Available

456 AIS6638274
Name : Raju Shivprasad Shriniwas
Father's Name: Shivprasad Shriniwas
House Number : 103
Age : 54 Gender : Male
Photo Available

457 AIS2392900
Name : Arun Motilal Shrivas
Father's Name: Motilal Shrivas
House Number : 103
Age : 68 Gender : Male
Photo Available

458 AIS2392892
Name : Nirmala Arun Shrivas
Husband's Name: Arun Shrivas
House Number : 103
Age : 58 Gender : Female
Photo Available

459 AIS0102327
Name : Bhushan Nathuram Zade
Father's Name: Nathuram Zade
House Number : 105
Age : 51 Gender : Male
Photo Available

460 AIS2392462
Name : Meena Padmakar Gillarakar
Husband's Name: Padmakar Gillarakar
House Number : 107
Age : 74 Gender : Female
Photo Available

461 AIS6638365
Name : Sandhya Dynaneshvar Raut
Husband's Name: Dynaneshvar Raut
House Number : 109
Age : 59 Gender : Female
Photo Available

462 AIS8107765
Name : SHRADHA KHUNERE
Father's Name: SANJAY KHUNERE
House Number : 1/84, NEW RIDGE ROAD
Age : 26 Gender : Female
Photo Available

463 AIS6973473
Name : Manoj Sudhakar Hote
Father's Name: Sudhakar Hote
House Number : 206
Age : 58 Gender : Male
Photo Available

464 AIS6973481
Name : Suvarna Manoj Hote
Husband's Name: Manoj Hote
House Number : 206
Age : 51 Gender : Female
Photo Available

465 AIS8056897
Name : RANI SATHE
Father's Name: VINOD SATHE
House Number : QTR 41/1
Age : 28 Gender : Female
Photo Available

466 AIS7142722
Name : Sudhakar Govind Rao Nimje
Father's Name: Govind Rao Nimje
House Number : 102 4
Age : 55 Gender : Male
Photo Available

467 AIS7142730
Name : Aarti Sudhakar Nimje
Husband's Name: Sudhakar Nimje
House Number : 102 4
Age : 52 Gender : Female
Photo Available

468 AIS7848104
Name : HRASHA ASHISH KHADATKAR
Husband's Name: ASHISH KHADATKAR
House Number : 129/3
Age : 40 Gender : Female
Photo Available

469 AIS7443344
Name : ASHA SANTOSH BAJAJ
Husband's Name: SANTOSH BAJAJ
House Number : 132/B/2
Age : 58 Gender : Female
Photo Available

470 AIS8646531
Name : HARDIK BAJAJ
Father's Name: SATISH BAJAJ
House Number : 132/B/2
Age : 24 Gender : Male
Photo Available

471 AIS7443328
Name : SANTOSH SHIVPRASAD BAJAJ
Father's Name: SHIVPRASAD BAJAJ
House Number : PLOT NO 132/B/2
Age : 61 Gender : Male
Photo Available

472 AIS7443310
Name : SATISH SHIVPRASAD BAJAJ
Father's Name: SHIVPRASAD BAJAJ
House Number : PLOT NO 132/B/2
Age : 57 Gender : Male
Photo Available

473 AIS7443336
Name : RADHA SATISH BAJAJ
Husband's Name: SATISH BAJAJ
House Number : PLOT NO 132/B/2
Age : 52 Gender : Female
Photo Available

474 AIS7443245
Name : NAYAN SANTOSH BAJAJ
Father's Name: SANTOSH BAJAJ
House Number : PLOT NO 132/B/2
Age : 30 Gender : Male
Photo Available

475 AIS7707326
Name : Niraj Bajaj
Father's Name: Satish bajaj
House Number : PLOT NO 132/B/2
Age : 27 Gender : Male
Photo Available

476 AIS7165897
Name : Sonam Avinash Dhore
Father's Name: Avinash Dhore
House Number : 3/131
Age : 34 Gender : Female
Photo Available

477 AIS6973424
Name : Angha Dipak Deshmukha
Father's Name: Dipak Deshmukha
House Number : 5/135
Age : 32 Gender : Female
Photo Available

478 AIS8054892
Name : VRUSHABH KORKE
Father's Name: RAM KORKE
House Number : 6/129
Age : 27 Gender : Male
Photo Available

479 AIS8189748
Name : Praveen Ramesh Joshi
Father's Name: Ramesh Joshi
House Number : 12 17 1
Age : 51 Gender : Male
Photo Available

480 BKG0982256
Name : Madhuri Vinod Kothe
Husband's Name: Vinod Kothe
House Number : 12 7 12
Age : 58 Gender : Female
Photo Available

481 AIS6638373
Name : Sandeep Ramesh Joshi
Father's Name: Ramesh Joshi
House Number : 12871
Age : 49 Gender : Male
Photo Available

482 AIS8056244
Name : Dhananjay Band
Father's Name: Pramod Band
House Number : Qtr. No. L-7-10/12
Age : 25 Gender : Male
Photo Available

483 AIS6638340
Name : Sushma Bhushan Zade
Husband's Name: Bhushan Zade
House Number : 4860-105
Age : 45 Gender : Female
Photo Available

484 AIS8766446
Name : SHARVANI MOHAN KALE
Father's Name: MOHAN KALE
House Number : QUATER NO:8/31
Age : 21 Gender : Female
Photo Available

485 AIS8767675
Name : NEHAL UMESH THAKUR
Father's Name: UMESH THAKUR
House Number : HOUSE NO. 128
Age : 21 Gender : Male
Photo Available

486 AIS8923179
Name : Siddhesh Wanjari Wanjari
Father's Name: shraddha Wanjari
House Number : 107
Age : 23 Gender : Male
Photo Available

487 AIS7684095
Name : SHUBHAM DILIP NIKAM
Father's Name: DILIP NIKAM
House Number : Flat No 106, Priti Apartment
Age : 32 Gender : Male
Photo Available

488 AIS8981078
Name : ANMOL RAJENDRA UMALE
Father's Name: RAJENDRA UMALE
House Number : 6/53
Age : 20 Gender : Male
Photo Available

489 LLD0810408
Name : Sudhesh Daulatarav Sagar
Father's Name: Daulatarav Sagar
House Number : HOUSE NO. 4860
Age : 49 Gender : Male
Photo Available

490 AIS9226937

Name : ASHWINI SNEHAL ALONE
Husband's Name: SNEHAL ALONE
House Number : plot no. 21
Age : 36 Gender : Female

Photo Available

491 AIS9230004

Name : NARESH BALKRISHNA KSHETRAPAL
Father's Name: BALKRISHNA KSHETRAPAL
House Number : SHRADHA GALLI NO 1 NEAR CHOTA

Photo Available

492 AIS9230012

Name : VAISHALI NARESH KSHETRAPAL
Husband's Name: NARESH KSHETRAPAL
House Number : PLOT NO 40 SURVE LAY OUT
Age : 53 Gender : Female

Photo Available

493 AIS8663783
Name : Pratham Banode
Father's Name: Nilesh Radheshyam Banode
House Number : Plot no 1
Age : 24 Gender : Male
Photo Available

494 BKG0965962
Name : Snehal Prakash Devate
Father's Name: Prakash Devate
House Number : 8 4
Age : 39 Gender : Female
Photo Available

495 BKG0964965
Name : Parag Vikash Devate
Father's Name: Vikash Devate
House Number : 8 4
Age : 39 Gender : Male
Photo Available

496 AIS6638449
Name : Sanjay Chandrashekhar Vyavhare
Father's Name: Chandrashekhar Vyavhare
House Number : 106
Age : 59 Gender : Male
Photo Available

497 AIS2392629
Name : Suhas Sanjay Vyavhare
Husband's Name: Sanjay Vyavhare
House Number : 106
Age : 56 Gender : Female
Photo Available

498 AIS8189763
Name : Bhaurao Ghusaji Kadu
Father's Name: Ghusaji Kadu
House Number : 108
Age : 77 Gender : Male
Photo Available

499 AIS6638456
Name : Chandrakala Bhaurao Kadu
Husband's Name: Bhaurao Kadu
House Number : 108
Age : 72 Gender : Female
Photo Available

500 AIS2331494
Name : Sandeep Bhaurao Kadu
Father's Name: Bhaurao Kadu
House Number : 108
Age : 42 Gender : Male
Photo Available

501 BKG2269371
Name : Bhaiya Zingaruji Fendar
Father's Name: Zingaruji Fendar
House Number : 146
Age : 83 Gender : Male
Photo Available

502 BKG2269173
Name : Pushpa Bhaiya Fendar
Husband's Name: Bhaiya Fendar
House Number : 146
Age : 73 Gender : Female
Photo Available

503 BKG2269660
Name : Pramod Bhaiya Fendar
Father's Name: Bhaiya Fendar
House Number : 146
Age : 47 Gender : Male
Photo Available

504 AIS6638563
Name : Bijama Radheshyam Banode
Husband's Name: Radheshyam Banode
House Number : 1-8-1
Age : 76 Gender : Female
Photo Available

505 AIS6638605
Name : Lalita Krishna Narayan Banode
Husband's Name: Krishna Narayan Banode
House Number : 1-8-1
Age : 70 Gender : Female
Photo Available

506 AIS6638571
Name : Nilesh Radheshyam Banode
Father's Name: Radheshyam Banode
House Number : 1-8-1
Age : 56 Gender : Male
Photo Available

507 AIS6638613
Name : Rupesh Krishna Narayan Banode
Father's Name: Krishna Narayan Banode
House Number : 1-8-1
Age : 51 Gender : Male
Photo Available

508 AIS6638589
Name : Kirti Nilesh Banode
Husband's Name: Nilesh Banode
House Number : 1-8-1
Age : 50 Gender : Female
Photo Available

509 AIS6638621
Name : Ritesh Krishna Narayan Banode
Father's Name: Krishna Narayan Banode
House Number : 1-8-1
Age : 43 Gender : Male
Photo Available

510 AIS6638548
Name : Roshan Gurao
Father's Name: Janardhan Gurav
House Number : L-8-44, Q. No 1, Near Chhotaa
Age : 43 Gender : Male
Photo Available

511 AIS6638647
Name : Shraddha Suresh Raut
Husband's Name: Suresh Raut
House Number : 1-8-7
Age : 43 Gender : Female
Photo Available

512 BKG2267532
Name : Damodhar Ashok Mohadikar
Father's Name: Ashok Mohadikar
House Number : 6 70
Age : 47 Gender : Male
Photo Available

513 BKG0964882
Name : Suresh Chandra Nagorav Dixit
Father's Name: Nagorav Dixit
House Number : 8/18
Age : 75 Gender : Male
Photo Available

514 AIS6638423
Name : Prashant Namdevrao Ganorkar
Father's Name: Namdevrao Ganorkar
House Number : 8/43
Age : 50 Gender : Male
Photo Available

515 YQA9391467
Name : Nikhil Purushottam Vyas
Father's Name: Purushottam Vyas
House Number : A/11, 76 M.I.G. FLATS
Age : 48 Gender : Male
Photo Available

516 AIS6638688
Name : Mrunali Kailash Gulhane
Husband's Name: Kailash Gulhane
House Number : 12-7-2
Age : 44 Gender : Female
Photo Available

517 AIS0102557
Name : Aparna Ashok Chaurikar
Husband's Name: Ashok Chaurikar
House Number : 12 7 5
Age : 74 Gender : Female
Photo Available

518 AIS1383066
Name : Anand Ashok Chaurikar
Father's Name: Ashok Chaurikar
House Number : 12 7 5
Age : 49 Gender : Male
Photo Available

519 AIS0102567
Name : Ashwini Ashok Chaurikar
Father's Name: Ashok Chaurikar
House Number : 12 7 5
Age : 48 Gender : Female
Photo Available

520 AIS6638472
Name : Subhash Purushottam Sapkal
Father's Name: Purushottam Sapkal
House Number : 127-7
Age : 81 Gender : Male
Photo Available

521 AIS0102400
Name : Shubhangi Subhash Sapkal
Husband's Name: Subhash Sapkal
House Number : 127-7
Age : 71 Gender : Female
Photo Available

522 AIS0102369
Name : Anand Panjabrao Yevale
Father's Name: Panjabrao Yevale
House Number : 127 8
Age : 48 Gender : Male
Photo Available

523 AIS8103285
Name : Ashwini Yewle
Husband's Name: Anup Yewle
House Number : 12L7/8
Age : 35 Gender : Female
Photo Available

524 BKG0966176
Name : Prashant Narhari Jogi
Father's Name: Narhari Jogi
House Number : 12 7 9
Age : 44 Gender : Male
Photo Available

525 BKG0966192
Name : Vaishnavi Narhari Jogi
Father's Name: Narhari Jogi
House Number : 12 7 9
Age : 44 Gender : Female
Photo Available

526 BKG0982264
Name : Vinod Ramchandra Kothe
Father's Name: Ramchandra Kothe
House Number : 12 7 9
Age : 60 Gender : Male
Photo Available

527 BKG0966184
Name : Manju Narhari Jogi
Father's Name: Narhari Jogi
House Number : 127 9
Age : 49 Gender : Female
Photo Available

528 AIS8189771
Name : Sanjay Shankar Doifode
Father's Name: Shankar Doifode
House Number : 138 1
Age : 63 Gender : Male
Photo Available

529 AIS6638514
Name : Usha Shankar Doifode
Husband's Name: Shankar Doifode
House Number : 168-1
Age : 91 Gender : Female
Photo Available

530 BKG0978007
Name : Mangla Vilas Dhore
Husband's Name: Vilas Dhore
House Number : 16 8 4
Age : 53 Gender : Female
Photo Available

531 BKG0978015
Name : Vaishali Satish Dhore
Husband's Name: Satish Dhore
House Number : 16 8 4
Age : 51 Gender : Female
Photo Available

532 AIS6638811
Name : Sarita Raju Dhore
Husband's Name: Raju Dhore
House Number : 16-8-4
Age : 49 Gender : Female
Photo Available

533 AIS7165913
Name : Nihal Avinash Dhore
Father's Name: Avinash Dhore
House Number : 3/131
Age : 32 Gender : Male
Photo Available

534 BKG0966127
Name : Venutai Ram Krishna Gulhane
Husband's Name: Ram Krishna Gulhane
House Number : 12 1 7 2
Age : 78 Gender : Female
Photo Available

535 BKG0357913
Name : Kailash Ram Krishna Gulhane
Father's Name: Ram Krishna Gulhane
House Number : 12 1 7 2
Age : 50 Gender : Male
Photo Available

536 AIS6638712
Name : Asha Krishna Rao Jadhav
Husband's Name: Krishna Rao Jadhav
House Number : 12-1-7-3
Age : 76 Gender : Female
Photo Available

537 AIS0102389
Name : Kamal Panjabrao Yevale
Father's Name: Panjabrao Yevale
House Number : 12 1 7 7
Age : 72 Gender : Female
Photo Available

538 AIS6638498
Name : Ranju Narhari Jogi
Father's Name: Narhari Jogi
House Number : 12-1-7-9
Age : 48 Gender : Female
Photo Available

539 AIS0102577
Name : Ashok Bhaiyyaji Chaurikar
Father's Name: Bhaiyyaji Chaurikar
House Number : 12-7-15
Age : 81 Gender : Male
Photo Available

540 AIS2508307
Name : Rajni Manoj Khekare
Husband's Name: Manoj Khekare
House Number : 12 8 12
Age : 55 Gender : Female
Photo Available

541 AIS6638662
Name : Bhagyashree Devidas Punekar
Husband's Name: Devidas Punekar
House Number : 12871
Age : 84 Gender : Female
Photo Available

542 AIS8189797
Name : Sachin Devidas Punekar
Father's Name: Devidas Punekar
House Number : 12871
Age : 54 Gender : Male
Photo Available

543 AIS6638670
Name : Bhushan Devidas Punekar
Father's Name: Devidas Punekar
House Number : 12871
Age : 48 Gender : Male
Photo Available

544 AIS8189789
Name : Jyoti Sanjay Doifode
Husband's Name: Sanjay Doifode
House Number : 16 1 8 2
Age : 56 Gender : Female
Photo Available

545 AIS0102608
Name : Indumati Devchand Dandhare
Husband's Name: Devchand Dandhare
House Number : 16-1-8-3
Age : 78 Gender : Female
Photo Available

546 BKG0977926
Name : Raju Anand Dhore
Father's Name: Anand Dhore
House Number : 16 1 8 4
Age : 58 Gender : Male
Photo Available

547 BKG0978023
Name : Satish Anand Dhore
Father's Name: Anand Dhore
House Number : 16 1 8 4
Age : 55 Gender : Male
Photo Available

548 AIS1383132
Name : Kavita Praveen Thakare
Husband's Name: Praveen Thakare
House Number : 16 8 13
Age : 52 Gender : Female
Photo Available

549 AIS1383124
Name : Harsha Prashant Thakare
Husband's Name: Prashant Thakare
House Number : 16 8 13
Age : 49 Gender : Female
Photo Available

550 AIS7877319
Name : Rashmi Pravin Thakre
Father's Name: Pravin Thakre
House Number : 16L-8/13,Raghoji Nagar
Age : 30 Gender : Female
Photo Available

551 AIS1341122
Name : Prabhavati Bapoorao Mankar
Husband's Name: Bapoorao Mankar
House Number : 16 8 14
Age : 80 Gender : Female
Photo Available

552 AIS6638829
Name : Rajendra Bhiyalal Jaisawal
Father's Name: Bhiyalal Jaisawal
House Number : 16-8-15
Age : 66 Gender : Male
Photo Available

553 AIS6638837
Name : Nisha Rajendra Jaisawal
Husband's Name: Rajendra Jaisawal
House Number : 16-8-15
Age : 56 Gender : Female
Photo Available

554 AIS6638803
Name : Sunanda Vijay Naik
Husband's Name: Vijay Naik
House Number : 16-8-16
Age : 57 Gender : Female
Photo Available

555 AIS8189854
Name : Avinash Chudaman Bansod
Father's Name: Chudaman Bansod
House Number : 12 1 7 10
Age : 63 Gender : Male
Photo Available

556 AIS8189821
Name : Sanjay Chudaman Bansod
Father's Name: Chudaman Bansod
House Number : 12 1 7 10
Age : 55 Gender : Male
Photo Available

557 AIS8189862
Name : Bindu Avinash Bansod
Husband's Name: Avinash Bansod
House Number : 12 1 7 10
Age : 54 Gender : Female
Photo Available

558 AIS8189839
Name : Satish Chudaman Bansod
Father's Name: Chudaman Bansod
House Number : 12 1 7 10
Age : 53 Gender : Male
Photo Available

559 AIS8189847
Name : Praveen Chudaman Bansod
Father's Name: Chudaman Bansod
House Number : 12 1 7 10
Age : 51 Gender : Male
Photo Available

560 AIS2332146
Name : Manoj Jagannath Khekare
Father's Name: Jagannath Khekare
House Number : 12 1 7 12
Age : 53 Gender : Male
Photo Available

561 AIS6638696
Name : Ravi Jagannath Khekare
Father's Name: Jagannath Khekare
House Number : 12-1-7-12
Age : 60 Gender : Male
Photo Available

562 AIS8189870
Name : Kiran Ravi Khekare
Husband's Name: Ravi Khekare
House Number : 12-1-7-12
Age : 55 Gender : Female
Photo Available

563 AIS0102696
Name : Swati Dilip Atakare
Husband's Name: Dilip Atakare
House Number : 16-1-8-10
Age : 64 Gender : Female
Photo Available

564 AIS1383090
Name : Suman Balakrishn Thakare
Husband's Name: Balakrishn Thakare
House Number : 16 1 8 13
Age : 80 Gender : Female
Photo Available

565 AIS1383108
Name : Praveen Balakrishn Thakare
Father's Name: Balakrishn Thakare
House Number : 16 1 8 13
Age : 58 Gender : Male
Photo Available

566 AIS1383116
Name : Prashant Balakrishn Thakare
Father's Name: Balakrishn Thakare
House Number : 16 1 8 13
Age : 56 Gender : Male
Photo Available

567 AIS6638746
Name : Narendra Bapoorao Mankar
Father's Name: Bapoorao Mankar
House Number : 16-1-8-14
Age : 51 Gender : Male
Photo Available

568 AIS6638761
Name : Devanand Krishna Rao Naik
Father's Name: Krishna Rao Naik
House Number : 16-1-8-16
Age : 57 Gender : Male
Photo Available

569 AIS6638787
Name : Nanda Purushottam Naik
Husband's Name: Purushottam Naik
House Number : 16-1-8-16
Age : 57 Gender : Female
Photo Available

570 AIS8900581
Name : Pradnya Balapurkar
Father's Name: Subhash Sapkal
House Number : V.H.B. Colony, Q.no. L/7,12/7
Age : 53 Gender : Female
Photo Available

571 AIS8901191
Name : Shravani Satish Singamwar
Father's Name: Satish Shankarrao Singamwar
House Number : Flat No. 302 N.I.T Building
Age : 24 Gender : Female
Photo Available

SUMMARY OF ELECTORS

A) NUMBER OF ELECTORS

		Roll Type	Roll Identification	NUMBER OF ELECTORS			
				Male	Female	Third Gender	Total
I	Original	Mother Roll	Draft Electoral Roll prepared under Special Intensive Revision - 2026	280	291	0	571
				280	291	0	571

Issued by Electoral Registration Office