ELECTORAL ROLL 2026 S13 Maharashtra

No. Name and Reservation Status of Assembly Constituency : 84 - HADGAON (GEN)	Part No. : 272
No. Name and Reservation Status of Parliamentary Constituency(ies) in which the Assembly Constituency is located : 15 - HINGOLI (GEN)	

1. Details of Revision

Year of Revision	**2026**
Qualifying Date	**01-10-2026**
Type of revision	**Special Intensive Revision 2026**
Date of Publication	**31-08-2026**

Roll Identification

Draft Electoral Roll prepared under Special Intensive Revision - 2026

2. Details of part and polling area

No. and name of sections in the part

1-pavana Tanda,dastagir Wadi
2-Pavana Tanda,dastagir Wadi
3-pavana Tanda,dastagir Wadi

Main Town or Village	: PAVNA TANDA
Police Station	: HIMAYATNAGAR
Taluka	: HIMAYATNAGAR
District	: NANDED
Pin code	: 431802

3. Polling Station Details

No. and Name of Polling Station : 272 - Pavna Tanda **Address of Polling Station :** Z.P.P.S, Room No 1, Pavna Tanda	**Type of Polling Station (Male/Female/General)**	General
	Number of Auxiliary Polling Stations in this part :	0

4. NUMBER OF ELECTORS

Starting Serial No.	Ending Serial No.	Net Electors			
		Male	Female	Third Gender	Total
1	550	287	263	0	550

Issued by Electoral Registration Office

Nazri Naksha

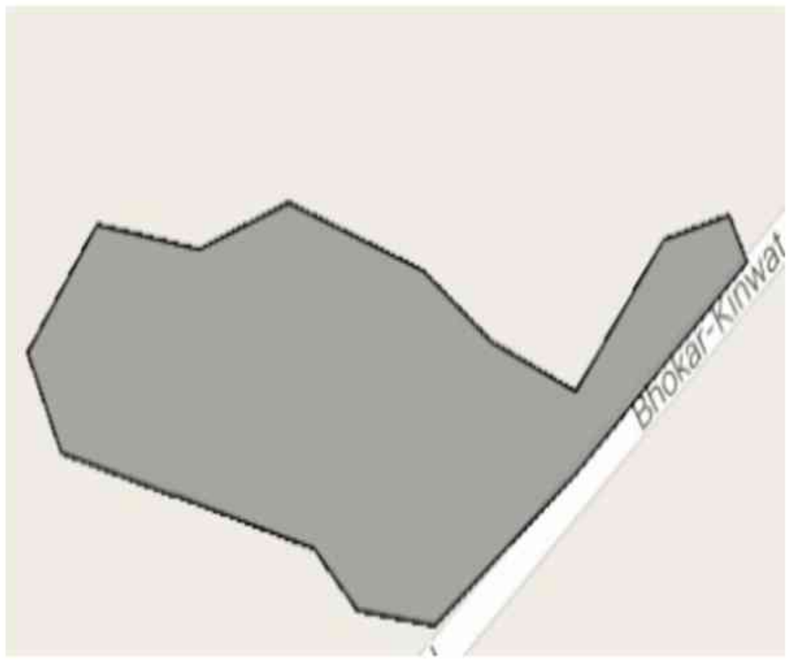

Google Map View

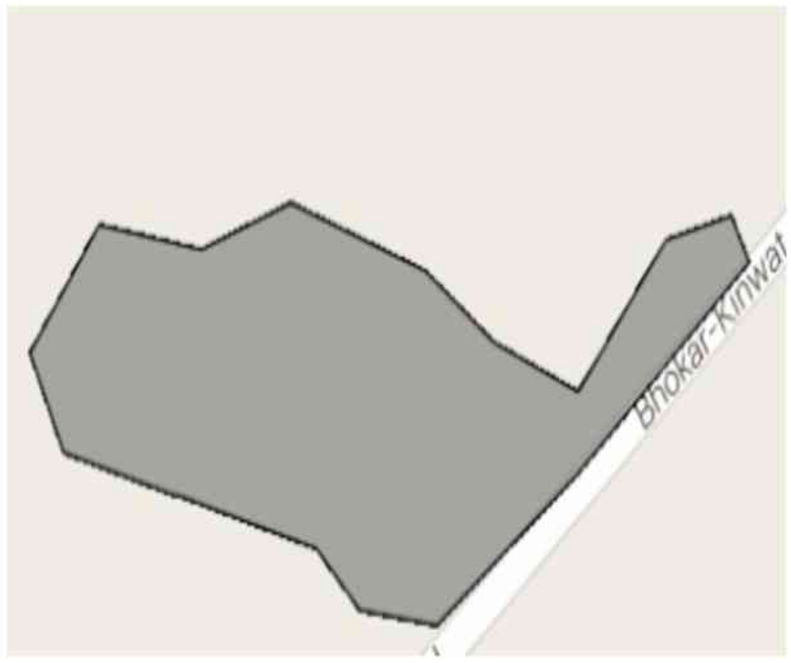

Polling Station Building Front View



Polling Station Front View



Cad View

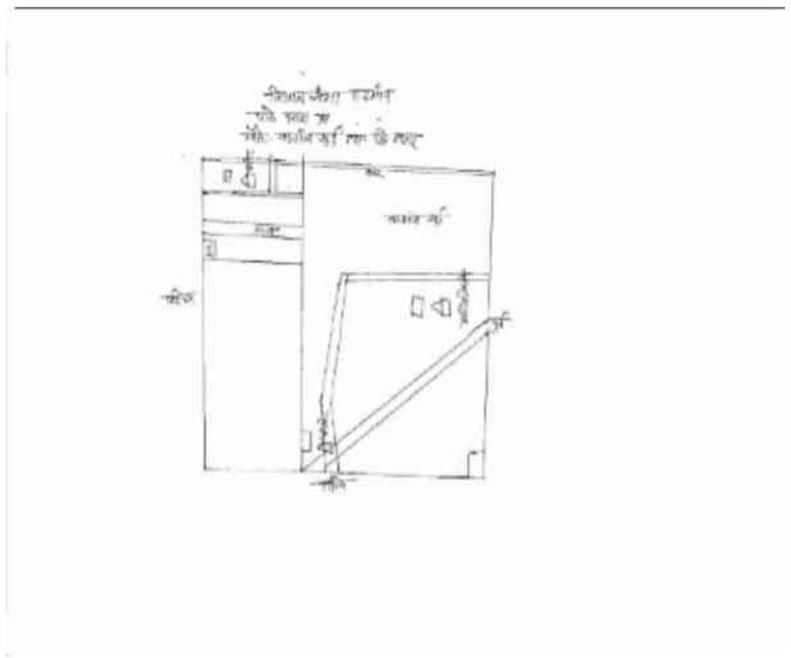

Key MAP View

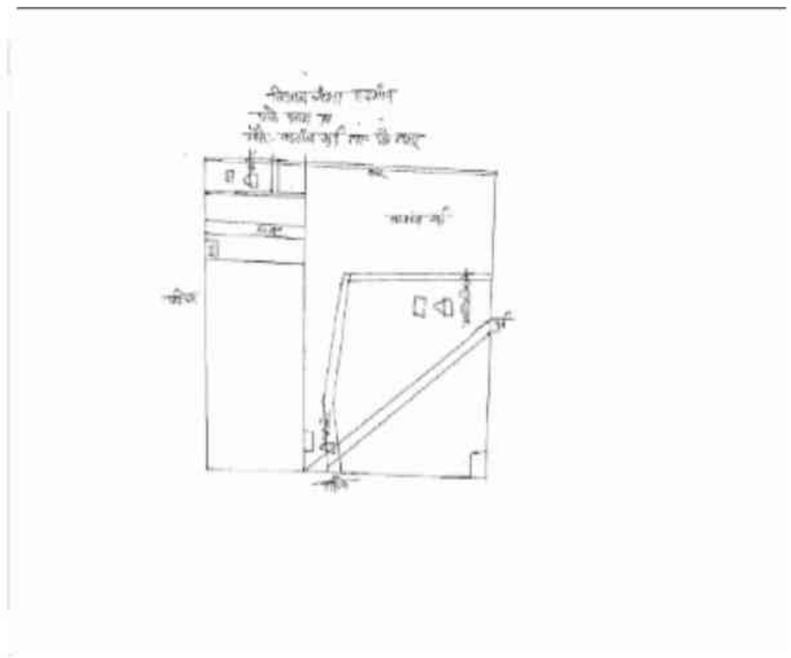

1 SYF3194073
Name : Amol Nandu Ade
Father's Name: Nandu Ade
House Number :
Age : 32 Gender : Male
Photo Available

2 SYF3193794
Name : Priyanka Hanmant Ambure
Husband's Name: Hanmant Ambure
House Number :
Age : 34 Gender : Female
Photo Available

3 SYF3085834
Name : Pandit Raghunath Chauhan
Father's Name: Raghunath Chauhan
House Number :
Age : 39 Gender : Male
Photo Available

4 SYF1517077
Name : Sangeeta Pandit Chauhan
Husband's Name: Pandit Chauhan
House Number :
Age : 37 Gender : Female
Photo Available

5 SYF3194040
Name : janabai Tukaram Deshmukhe
Husband's Name: Tukaram Deshmukhe
House Number :
Age : 58 Gender : Female
Photo Available

6 SYF3194024
Name : Maroti Tukaram Deshmukhe
Father's Name: Tukaram Deshmukhe
House Number :
Age : 41 Gender : Male
Photo Available

7 SYF3194032
Name : Shobha Maroti Deshmukhe
Husband's Name: Maroti Deshmukhe
House Number :
Age : 33 Gender : Female
Photo Available

8 SYF3193968
Name : lalitabai Vikas Jadhav
Husband's Name: Vikas Jadhav
House Number :
Age : 43 Gender : Female
Photo Available

9 SYF3193950
Name : Priyanka Pandit Jadhav
Husband's Name: Pandit Jadhav
House Number :
Age : 39 Gender : Female
Photo Available

10 SYF2580637
Name : Gajanan Bapurao Jadhav
Father's Name: Bapurao Jadhav
House Number :
Age : 33 Gender : Male
Photo Available

11 SYF3194081
Name : Najam Khiru Jadhav
Father's Name: Khiru Jadhav
House Number :
Age : 35 Gender : Male
Photo Available

12 SYF3193877
Name : Gundaji Dhavaji Jadhav
Father's Name: Dhavaji Jadhav
House Number :
Age : 33 Gender : Male
Photo Available

13 SYF3325396
Name : Rameshwari Najam Jadhav
Husband's Name: Najam Jadhav
House Number :
Age : 31 Gender : Female
Photo Available

14 SYF4310488
Name : Devidas Gulab Jadhav
Father's Name: Gulab Jadhav
House Number :
Age : 30 Gender : Male
Photo Available

15 SYF3194065
Name : Divakar Arjun Jadhav
Father's Name: Arjun Jadhav
House Number :
Age : 31 Gender : Male
Photo Available

16 SYF3193844
Name : Sandip Laxman Jadhav
Father's Name: Laxman Jadhav
House Number :
Age : 31 Gender : Male
Photo Available

17 SYF4308268
Name : Rajesh Uttam Jadhav
Father's Name: Uttam English
House Number :
Age : 29 Gender : Male
Photo Available

18 SYF3085859
Name : Balwant Gowardhan Pawar
Father's Name: Gowardhan Pawar
House Number :
Age : 72 Gender : Male
Photo Available

19 SYF3085875
Name : Neelabai Balwant Pawar
Husband's Name: Balwant Pawar
House Number :
Age : 62 Gender : Female
Photo Available

20 SYF1558246
Name : Indal Gobra Pawar
Father's Name: Gobra Pawar
House Number :
Age : 57 Gender : Male
Photo Available

21 SYF1558253
Name : Savitrabai Indal Pawar
Husband's Name: Indal Pawar
House Number :
Age : 52 Gender : Female
Photo Available

22 SYF3085883
Name : Pandit Balwant Pawar
Father's Name: Balwant Pawar
House Number :
Age : 39 Gender : Male
Photo Available

23 SYF3085842
Name : Rukmini Pandit Pawar
Husband's Name: Pandit Pawar
House Number :
Age : 37 Gender : Female
Photo Available

24 SYF3085891
Name : Raju Balwant Pawar
Father's Name: Balwant Pawar
House Number :
Age : 35 Gender : Male
Photo Available

25 SYF2938231
Name : Jagdish Indal Pawar
Father's Name: Indal Pawar
House Number :
Age : 31 Gender : Male
Photo Available

26 SYF3194008
Name : Ram Bhiku Rathod
Father's Name: Bhiku Rathod
House Number :
Age : 48 Gender : Male
Photo Available

27 SYF1531391
Name : Vanita Shesherao Rathod
Husband's Name: Shesherao Rathod
House Number :
Age : 42 Gender : Female
Photo Available

28 SYF3436557
Name : Janabai Rohidas Rathod
Husband's Name: Rohidas Rathod
House Number :
Age : 42 Gender : Female
Photo Available

29 SYF1531383
Name : Shesherao Dipala Rathod
Father's Name: Dipala Rathod
House Number :
Age : 38 Gender : Male
Photo Available

30 SYF2580645
Name : Govind Dharma Rathod
Father's Name: Dharma Rathod
House Number :
Age : 38 Gender : Male
Photo Available

31 SYF3246634 Name : Savitabai Raghunath Rathod Father's Name: Raghunath Rathod House Number : Age : 36 Gender : Female Photo Available	32 SYF2580629 Name : Leelabai Parasram Rathod Husband's Name: Parasram Rathod House Number : Age : 34 Gender : Female Photo Available	33 SYF3246659 Name : Marubai Ramdas Rathod Husband's Name: Ramdas Rathod House Number : Age : 34 Gender : Female Photo Available
34 SYF3246618 Name : Raghunath Gopa Rathod Father's Name: Gopa Rathod House Number : Age : 34 Gender : Male Photo Available	35 SYF3193851 Name : Mamta Laxman Rathod Husband's Name: Laxman Rathod House Number : Age : 33 Gender : Female Photo Available	36 SYF3193885 Name : Manutai Balu Rathod Husband's Name: Balu Rathod House Number : Age : 33 Gender : Female Photo Available
37 SYF3193943 Name : Nitin Tukaram Rathod Father's Name: Tukaram Rathod House Number : Age : 32 Gender : Male Photo Available	38 SYF3436565 Name : Alka Ram Rathod Husband's Name: Ram Rathod House Number : Age : 31 Gender : Female Photo Available	39 SYF3194016 Name : Rekha Ram Rathod Husband's Name: Ram Rathod House Number : Age : 32 Gender : Female Photo Available
40 SYF3194057 Name : Vivek Devidas Rathod Father's Name: Devidas Rathod House Number : Age : 31 Gender : Male Photo Available	41 SYF3436573 Name : Krushna Anandrao Rathod Father's Name: Anandrao Rathod House Number : Age : 29 Gender : Male Photo Available	42 SYF3436540 Name : Shirishatai Laxman Rathod Husband's Name: Laxman Rathod House Number : Age : 29 Gender : Female Photo Available
43 SYF4306411 Name : Ankush Vasant Rathod Father's Name: Vasant Rathod House Number : Age : 28 Gender : Male Photo Available	44 SYF3193919 Name : Chandrakant Jalba Raut Father's Name: Jalba Raut House Number : Age : 39 Gender : Male Photo Available	45 SYF3246642 Name : Gangasagar Rajeshwar Zalake Husband's Name: Rajeshwar Zalake House Number : Age : 34 Gender : Female Photo Available
46 SYF4527222 Name : SHIVANI RATHOD Husband's Name: GOVIND RATHOD House Number : 0 Age : 23 Gender : Female Photo Available	47 SYF4505681 Name : Sunita Pandurang Agire Husband's Name: Pandurang Agire House Number : 00 Age : 29 Gender : Female Photo Available	48 SYF4505566 Name : Datta Balaji Ambure Father's Name: Balaji Ambure House Number : 00 Age : 24 Gender : Male Photo Available
49 SYF4505616 Name : Shrikant Mangilal Chavhan Father's Name: Mangilal Chavhan House Number : 00 Age : 23 Gender : Male Photo Available	50 SYF4505590 Name : Devkabai Subhas Hurduke Husband's Name: Subhash Hurduke House Number : 00 Age : 34 Gender : Female Photo Available	51 SYF4505533 Name : Ramdas Maroti Hurduke Father's Name: Maroti Hurduke House Number : 00 Age : 32 Gender : Male Photo Available
52 SYF4505558 Name : Jijabai Ramdas Hurduke Husband's Name: Ramdas Hurduke House Number : 00 Age : 28 Gender : Female Photo Available	53 SYF4505665 Name : Anil Rohidas Jadhav Father's Name: Rohidas Jadhav House Number : 00 Age : 25 Gender : Male Photo Available	54 SYF4505673 Name : Sunil Rohidas Jadhav Father's Name: Rohidas Jadhav House Number : 00 Age : 24 Gender : Male Photo Available
55 SYF4505574 Name : Manohar Badu Rathod Father's Name: Badu Rathod House Number : 00 Age : 34 Gender : Male Photo Available	56 SYF4505541 Name : Bhulabai Manohar Rathod Husband's Name: Manohar Rathod House Number : 00 Age : 25 Gender : Female Photo Available	57 SYF4505608 Name : Durgadas Shesherao Rathod Father's Name: Shesherao Rathod House Number : 00 Age : 23 Gender : Male Photo Available
58 SYF4505640 Name : Nisha Parmeshwar Rathod Husband's Name: Parmeshwar Rathod House Number : 00 Age : 23 Gender : Female Photo Available	59 SYF4505517 Name : Mirabai Amol Rathod Husband's Name: Amol Rathod House Number : 00 Age : 22 Gender : Female Photo Available	60 SYF4505525 Name : Navnath Ganesh Rathod Father's Name: Ganesh Rathod House Number : 00 Age : 22 Gender : Female Photo Available

61 SYF4539730
Name : SONABAI RATHOD
Husband's Name: SUNIL RATHOD
House Number : PAWANA TANDA
Age : 35 Gender : Female
Photo Available

62 SYF4303665
Name : kamalabai rathod
Husband's Name: fulsing rathod
House Number : 1
Age : 65 Gender : Female
Photo Available

63 SYF4356267
Name : Sonabai rathod
Husband's Name: ULHAS RATHOD
House Number : 1
Age : 25 Gender : Female
Photo Available

64 SYF4356283
Name : PRIYNKA RATHOD
Husband's Name: AMBADAS RATHOD
House Number : 03
Age : 24 Gender : Female
Photo Available

65 SYF4356432
Name : YOGESH DEVIDAS AMBURE
Father's Name: DEVIDAS AMBURE
House Number : 3
Age : 24 Gender : Male
Photo Available

66 SYF4306734
Name : Sunil Bapurao Jadhav
Father's Name: Bapurao Jadhav
House Number : 3
Age : 30 Gender : Male
Photo Available

67 SYF4357463
Name : LATA RATHOD
Husband's Name: PREMSING RATHOD
House Number : 3
Age : 24 Gender : Female
Photo Available

68 SYF4356317
Name : ANITABAI JADHAV
Husband's Name: GABESH JADHAV
House Number : 4
Age : 45 Gender : Female
Photo Available

69 SYF3626413
Name : Jyoti Govind Jadhav
Husband's Name: Govind Jadhav
House Number : 5
Age : 27 Gender : Female
Photo Available

70 SYF4356333
Name : LAXMI JADHAV
Husband's Name: GAJANAN
House Number : 5
Age : 25 Gender : Female
Photo Available

71 SYF4356382
Name : PREMSING RATHOD
Father's Name: BHIKU RATHOD
House Number : 5
Age : 39 Gender : Male
Photo Available

72 SYF4357414
Name : KALPNA JADHAV
Husband's Name: PANDIT JADHAV
House Number : 8
Age : 40 Gender : Female
Photo Available

73 SYF3750841
Name : Jyoti Ade
Husband's Name: Yuvraj Ade
House Number : 11
Age : 34 Gender : Female
Photo Available

74 SYF4375770
Name : Reenabai Sunil Jadhav
Husband's Name: Sunil Jadhav
House Number : 12
Age : 24 Gender : Female
Photo Available

75 SYF3436425
Name : Laxman Jayvantrao Rathod
Father's Name: Jayvantrao Rathod
House Number : 14
Age : 33 Gender : Male
Photo Available

76 SYF4375788
Name : Shobhabai Jadhav
Husband's Name: Tanaji Jadhav
House Number : 15
Age : 34 Gender : Female
Photo Available

77 SYF4494530
Name : LALITA SATISH JADHAV
Husband's Name: SATISH JADHAV
House Number : 17
Age : 29 Gender : Female
Photo Available

78 SYF3750833
Name : Akash Jadhav
Father's Name: Subhash Jadhav
House Number : 17
Age : 26 Gender : Male
Photo Available

79 SYF3436516
Name : Rohidas Bhiku Rathod
Father's Name: Bhiku Rathod
House Number : 17
Age : 45 Gender : Male
Photo Available

80 SYF3501129
Name : Surekhabai Laxman Rathod
Husband's Name: Laxman Rathod
House Number : 17
Age : 30 Gender : Female
Photo Available

81 SYF3436508
Name : Sangita Ashok Jadhav
Husband's Name: Ashok Jadhav
House Number : 19
Age : 36 Gender : Female
Photo Available

82 SYF3501087
Name : Lilabai Charansing Chavan
Husband's Name: Charansing Chavan
House Number : 21
Age : 40 Gender : Female
Photo Available

83 SYF4375838
Name : Subhash Rathod
Father's Name: Rupala Rathod
House Number : 21
Age : 46 Gender : Male
Photo Available

84 SYF3750882
Name : Sakubai Jadhav
Husband's Name: Gundaji Jadhav
House Number : 22
Age : 29 Gender : Female
Photo Available

85 SYF4303657
Name : parmeshwar rathod
Father's Name: fulsing rathod
House Number : 22
Age : 26 Gender : Male
Photo Available

86 SYF4357471
Name : NAGESH AMBURE
Father's Name: SHIVAJI AMBURE
House Number : 23
Age : 27 Gender : Male
Photo Available

87 SYF4509808
Name : Ranjanabai Dokhale
Husband's Name: Ganesh Dokhale
House Number : 23
Age : 37 Gender : Female
Photo Available

88 SYF3698560
Name : Ganesh Rama Dokhale
Father's Name: Rama Dokhale
House Number : 23
Age : 36 Gender : Male
Photo Available

89 SYF3794070
Name : Ram Rathod
Father's Name: Anandrao Rathod
House Number : 23
Age : 29 Gender : Male
Photo Available

90 SYF3501319
Name : Babul Shankar Ade
Father's Name: Shankar Ade
House Number : 25
Age : 28 Gender : Male
Photo Available

91 SYF3626504
Name : Aruna Digambar Ambhore
Husband's Name: Digambar Ambhore
House Number : 25
Age : 27 Gender : Female
Photo Available

92 SYF3501343
Name : Dhanlal Ganesh Jadhav
Father's Name: Ganesh Jadhav
House Number : 25
Age : 30 Gender : Male
Photo Available

93 SYF3750890
Name : Mirabai Jadhav
Husband's Name: Datta Jadhav
House Number : 25
Age : 28 Gender : Female
Photo Available

94 SYF4406823
Name : rahul jadhav
Father's Name: sanjay jadhav
House Number : 25
Age : 23 Gender : Male
Photo Available

95 SYF3698867
Name : Yashoda Chandu Jadhav
Husband's Name: Chandu Jadhav
House Number : 26
Age : 27 Gender : Female
Photo Available

96 SYF3750874
Name : Susmita Jadhav
Husband's Name: Ravsaheb Jadhav
House Number : 36
Age : 27 Gender : Female
Photo Available

97 SYF3562451
Name : Dharma Khuba Rathod
Father's Name: Khuba Rathod
House Number : 36
Age : 68 Gender : Male
Photo Available

98 SYF3792355
Name : Shobhabai Rathod
Husband's Name: Lalu Rathod
House Number : 36
Age : 39 Gender : Female
Photo Available

99 SYF3436524
Name : Ravi Ganpat Jadhav
Father's Name: Ganpat Jadhav
House Number : 37
Age : 30 Gender : Male
Photo Available

100 SYF4399804
Name : Shri Jadhav
Husband's Name: Ravi Jadhav
House Number : 37
Age : 25 Gender : Female
Photo Available

101 SYF3794708
Name : Parubai Ade
Husband's Name: Bhimrao Ade
House Number : 39
Age : 70 Gender : Female
Photo Available

102 SYF3795010
Name : Reshamabai Jadhav
Father's Name: Jayvantrao Jadhav
House Number : 39
Age : 27 Gender : Female
Photo Available

103 SYF4375853
Name : Rahul Jadhav
Father's Name: Uttam Jadhav
House Number : 39
Age : 24 Gender : Male
Photo Available

104 SYF3501095
Name : Sangita Pandit Rathod
Husband's Name: Pandit Rathod
House Number : 39
Age : 28 Gender : Female
Photo Available

105 SYF3794104
Name : Minakshi Raut
Husband's Name: Dipak Raut
House Number : 39
Age : 29 Gender : Female
Photo Available

106 SYF4306304
Name : Laxman Bhiku Rathod
Father's Name: Bhiku Rathod
House Number : 40
Age : 32 Gender : Male
Photo Available

107 SYF3794039
Name : Dilip Jadhav
Father's Name: Dhena Jadhav
House Number : 41
Age : 65 Gender : Male
Photo Available

108 SYF3501376
Name : Ullas Ramesh Rathod
Father's Name: Ramesh Rathod
House Number : 45
Age : 43 Gender : Male
Photo Available

109 SYF2937837
Name : Chandu Digambar Jadhav
Father's Name: Digambar Jadhav
House Number : 47
Age : 35 Gender : Male
Photo Available

110 SYF3436532
Name : Anil Namdev Jadhav
Father's Name: Namdev Jadhav
House Number : 47
Age : 31 Gender : Male
Photo Available

111 SYF3436466
Name : Vitthal Bapurao Rathod
Father's Name: Bapurao Rathod
House Number : 47
Age : 31 Gender : Male
Photo Available

112 SYF3501368
Name : Balaji Lalsing Rathod
Father's Name: Lalsing Rathod
House Number : 47
Age : 28 Gender : Male
Photo Available

113 SYF3794054
Name : Jayvantrao Rathod
Father's Name: Gopa Rathod
House Number : 51
Age : 60 Gender : Male
Photo Available

114 SYF3501145
Name : Vandanabai Narayan Pawar
Husband's Name: Narayan Pawar
House Number : 54
Age : 28 Gender : Female
Photo Available

115 SYF3436474
Name : Balaji Vitthal Jadhav
Father's Name: Vitthal Jadhav
House Number : 55
Age : 30 Gender : Male
Photo Available

116 SYF4375846
Name : Lalu Rathod
Father's Name: Rupala Rathod
House Number : 55
Age : 38 Gender : Male
Photo Available

117 SYF3436417
Name : Sunil Jayawant Rathod
Father's Name: Rathod Jayawant Rathod
House Number : 55
Age : 30 Gender : Male
Photo Available

118 SYF4358214
Name : Chandrao Davji Wakode
Father's Name: DAVJI WAKODE
House Number : 55
Age : 24 Gender : Male
Photo Available

119 SYF4375796
Name : Jamunabai Jadhav
Husband's Name: Devidas Jadhav
House Number : 56
Age : 29 Gender : Female
Photo Available

120 SYF3794013
Name : Narayan Pawar
Father's Name: Eandal Pawar
House Number : 62
Age : 39 Gender : Male
Photo Available

121 SYF3698875
Name : Gangasagar Sainath Gavale
Husband's Name: Sainath Gavale
House Number : 63
Age : 30 Gender : Female
Photo Available

122 SYF3750866
Name : Datta Jadhav
Father's Name: Dhavji Jadhav
House Number : 63
Age : 31 Gender : Male
Photo Available

123 SYF3698578
Name : Sonabai Divakar Jadhav
Husband's Name: Divakar Jadhav
House Number : 63
Age : 29 Gender : Female
Photo Available

124 SYF3698586
Name : Sushila Anil Jadhav
Husband's Name: Anil Jadhav
House Number : 63
Age : 26 Gender : Female
Photo Available

125 SYF3501327
Name : Santosh Indal Pawar
Father's Name: Indal Pawar
House Number : 63
Age : 29 Gender : Male
Photo Available

126 SYF4375804
Name : Sonubai Jadhav
Husband's Name: Dhanalal Jadhav
House Number : 68
Age : 23 Gender : Female
Photo Available

127 SYF3792439
Name : Godavari Jadhav
Husband's Name: Santosh Jadhav
House Number : 69
Age : 40 Gender : Female
Photo Available

128 SYF3792447
Name : Ashvini Jadhav
Husband's Name: Balaji Jadhav
House Number : 69
Age : 28 Gender : Female
Photo Available

129 SYF3792363
Name : Samakabai Rathod
Husband's Name: Ram Rathod
House Number : 69
Age : 28 Gender : Female
Photo Available

130 SYF4358180
Name : PANDURANG AMBURE
Father's Name: BHAGORAV AMBURE
House Number : 77
Age : 26 Gender : Male
Photo Available

131 SYF3750825
Name : Rukmina Ambure
Husband's Name: Vitthal Ambure
House Number : 85
Age : 32 Gender : Female
Photo Available

132 SYF3795036
Name : Shesherao Jadhav
Father's Name: Kishan Jadhav
House Number : 87
Age : 50 Gender : Male
Photo Available

133 SYF3501111
Name : Sarodabai Sagdish Pawar
Husband's Name: Sagdish Pawar
House Number : 90
Age : 28 Gender : Female
Photo Available

134 SYF3794112
Name : Bharatbai Ambure
Husband's Name: Balaji Ambure
House Number : 95
Age : 49 Gender : Female
Photo Available

135 SYF3501350
Name : Santish Shankar Rathod
Father's Name: Shankar Rathod
House Number : 97
Age : 32 Gender : Male
Photo Available

136 SYF3794138
Name : Balaji Ambure
Father's Name: Mahadu Ambure
House Number : 99
Age : 50 Gender : Male
Photo Available

137 SYF3698768
Name : Laxman Bhimrao Aade
Father's Name: Bhimrao Aade
House Number : 101
Age : 39 Gender : Male
Photo Available

138 SYF3698693
Name : Devakabai Laxman Aade
Husband's Name: Laxman Aade
House Number : 101
Age : 33 Gender : Female
Photo Available

139 SYF3698719
Name : Kishan Bhagorao Ambure
Father's Name: Bhagorao Ambure
House Number : 101
Age : 38 Gender : Male
Photo Available

140 SYF3698677
Name : Surekha Kishan Ambure
Husband's Name: Kishan Ambure
House Number : 101
Age : 35 Gender : Female
Photo Available

141 SYF3698735
Name : udhav Charansing Chavan
Father's Name: Charansing Chavan
House Number : 101
Age : 25 Gender : Male
Photo Available

142 SYF3698800
Name : Satish Gulab Jadhav
Father's Name: Gulab Jadhav
House Number : 101
Age : 31 Gender : Male
Photo Available

143 SYF3698818
Name : Anil Laxman Jadhav
Father's Name: Laxman Jadhav
House Number : 101
Age : 28 Gender : Male
Photo Available

144 SYF3698826
Name : Danraj Balaji Jadhav
Father's Name: Balaji Jadhav
House Number : 101
Age : 26 Gender : Male
Photo Available

145 SYF3698784
Name : Prafull Bapurao Jadhav
Father's Name: Bapurao Jadhav
House Number : 101
Age : 27 Gender : Male
Photo Available

146 SYF3698651
Name : Manusha Shankar Jadhav
Husband's Name: Shankar Jadhav
House Number : 101
Age : 26 Gender : Female
Photo Available

147 SYF3698776
Name : Balaji Dhavji Jadhav
Father's Name: Dhavji Jadhav
House Number : 101
Age : 25 Gender : Male
Photo Available

148 SYF3698743
Name : Sanjay Devrao Pawar
Father's Name: Devrao Pawar
House Number : 101
Age : 26 Gender : Male
Photo Available

149 SYF3698685
Name : Vachalabai Vithhal Rathod
Husband's Name: Vithhal Rathod
House Number : 101
Age : 35 Gender : Female
Photo Available

150 SYF3698792
Name : Babu Tukaram Rathod
Father's Name: Tukaram Rathod
House Number : 101
Age : 30 Gender : Male
Photo Available

151 SYF3698644
Name : Ambadas Babulal Rathod
Father's Name: Babulal Rathod
House Number : 101
Age : 30 Gender : Male
Photo Available

152 SYF3698701
Name : Chanda Ganesh Rathod
Husband's Name: Ganesh Rathod
House Number : 101
Age : 29 Gender : Female
Photo Available

153 SYF3750817
Name : Chandrabhan Ambure
Father's Name: Shankar Ambure
House Number : 109
Age : 25 Gender : Male
Photo Available

154 SYF2937852
Name : Narayan Parkash Wanole
Father's Name: Parkash Wanole
House Number : 197
Age : 37 Gender : Male
Photo Available

155 SYF2937860
Name : Hari Parkash Wanole
Father's Name: Parkash Wanole
House Number : 197
Age : 33 Gender : Male
Photo Available

156 SYF3626470
Name : Shital Ramdas Wanole
Husband's Name: Ramdas Wanole
House Number : 197
Age : 31 Gender : Female
Photo Available

157 SYF3626611
Name : Ramdas Prakash Wanole
Father's Name: Prakash Wanole
House Number : 197
Age : 30 Gender : Male
Photo Available

158 SYF4358248
Name : MAROTI WAKODE
Father's Name: ANIL WAKODE
House Number : 234
Age : 26 Gender : Male
Photo Available

159 SYF3085974
Name : Saralabai Jaisingh Rathod
Husband's Name: Jaisingh Rathod
House Number : 303
Age : 44 Gender : Female
Photo Available

160 SYF3085982
Name : Taibai Sanjay Rathod
Husband's Name: Sanjay Rathod
House Number : 303
Age : 41 Gender : Female
Photo Available

161 SYF2580579
Name : Ashok Dilip Jadhav
Father's Name: Dilip Jadhav
House Number : 305
Age : 37 Gender : Male
Photo Available

162 SYF2580777
Name : Laxman Dhanu Rathod
Father's Name: Dhanu Rathod
House Number : 306
Age : 37 Gender : Male
Photo Available

163 SYF3085776
Name : Mayabai Laxman Rathod
Husband's Name: Laxman Rathod
House Number : 306
Age : 37 Gender : Female
Photo Available

164 SYF4402731
Name : Govind Rathod
Father's Name: Devidas Rathod
House Number : 306
Age : 25 Gender : Male
Photo Available

165 SYF2580785
Name : Raju Bapurao Jadhav
Father's Name: Bapurao Jadhav
House Number : 307
Age : 40 Gender : Male
Photo Available

166 SYF2580793
Name : Sarla Raju Jadhav
Husband's Name: Raju Jadhav
House Number : 307
Age : 35 Gender : Female
Photo Available

167 SYF4399762
Name : Balaji Jadhav
Father's Name: Bapurao Jadhav
House Number : 307
Age : 25 Gender : Male
Photo Available

168 SYF3698529
Name : Amol Vasant Rathod
Father's Name: Vasant Rathod
House Number : 308
Age : 27 Gender : Male
Photo Available

169 SYF1531292
Name : Shobha Santosh Rathod
Husband's Name: Santosh Rathod
House Number : 309
Age : 39 Gender : Female
Photo Available

170 SYF3085990
Name : Santosh Badu Rathod
Father's Name: Badu Rathod
House Number : 309
Age : 39 Gender : Male
Photo Available

171 SYF2580801
Name : Sudhakar Baliram Pawar
Father's Name: Baliram Pawar
House Number : 310
Age : 36 Gender : Male
Photo Available

172 SYF2580819
Name : Latabai Sudhakar Pawar
Husband's Name: Sudhakar Pawar
House Number : 310
Age : 34 Gender : Female
Photo Available

173 BHW1463025
Name : Sakundarav Dharma Rathod
Father's Name: Dharma Rathod
House Number : 311
Age : 44 Gender : Male
Photo Available

174 SYF3085743
Name : Nilavati Mukundrao Rathod
Husband's Name: Mukundrao Rathod
House Number : 311
Age : 37 Gender : Female
Photo Available

175 SYF3086006
Name : Devakabai Sakundarav Rathou
Husband's Name: Sakundarav Rathou
House Number : 311
Age : 42 Gender : Female
Photo Available

176 SYF2580827
Name : Vilas Babu Rathod
Father's Name: Babu Rathod
House Number : 314
Age : 36 Gender : Male
Photo Available

177 SYF2580603
Name : Sunil Baburao Rathod
Father's Name: Baburao Rathod
House Number : 314
Age : 34 Gender : Male
Photo Available

178 SYF3501392
Name : Sachin Subhash Rathod
Father's Name: Subhash Rathod
House Number : 314
Age : 30 Gender : Male
Photo Available

179 SYF3626439
Name : Warsha Ankush Ade
Husband's Name: Ankush Ade
House Number : 316
Age : 25 Gender : Female
Photo Available

180 SYF3626694
Name : Ankush Nandu Ade
Father's Name: Nandu Ade
House Number : 316
Age : 26 Gender : Male
Photo Available

181 SYF2938157
Name : Avinash Bhimrao Chavan
Father's Name: Bhimrao Chavan
House Number : 317
Age : 33 Gender : Male
Photo Available

182 SYF3393972
Name : Pankaj Bhimrao Chavan
Father's Name: Bhimrao Chavan
House Number : 317
Age : 30 Gender : Male
Photo Available

183 SYF3698594
Name : Bhavana Pankaj Chavan
Husband's Name: Pankaj Chavan
House Number : 317
Age : 26 Gender : Female
Photo Available

184 SYF2580835
Name : Varsha Devidas Jadhav
Husband's Name: Devidas Jadhav
House Number : 317
Age : 37 Gender : Female
Photo Available

185 BHW1486380
Name : Ramdas Gopa Rathod
Father's Name: Gopa Rathod
House Number : 318
Age : 48 Gender : Male
Photo Available

186 SYF2580587
Name : Ganesh Jaivant Rathod
Father's Name: Jaivant Rathod
House Number : 318
Age : 40 Gender : Male
Photo Available

187 SYF1826171
Name : Maroti Ravji Jadhav
Father's Name: Ravji Jadhav
House Number : 320
Age : 41 Gender : Male
Photo Available

188 SYF1571611
Name : Madhukar Laxman Jadhav
Father's Name: Laxman Jadhav
House Number : 320
Age : 39 Gender : Male
Photo Available

189 SYF1571603
Name : Rohidas Laxman Jadhav
Father's Name: Laxman Jadhav
House Number : 320
Age : 36 Gender : Male
Photo Available

190 SYF3085750
Name : Surekha Maroti Jadhav
Husband's Name: Maroti Jadhav
House Number : 320
Age : 36 Gender : Female
Photo Available

191 SYF3325404
Name : Sushama Rohidas Jadhav
Husband's Name: Rohidas Jadhav
House Number : 320
Age : 29 Gender : Female
Photo Available

192 SYF3086022
Name : Dargadas Laxman Jadhav
Father's Name: Laxman Jadhav
House Number : 321
Age : 45 Gender : Male
Photo Available

193 SYF3086014
Name : Jyotibai Durgadas Jadhav
Husband's Name: Durgadas Jadhav
House Number : 321
Age : 42 Gender : Female
Photo Available

194 SYF3698669
Name : Surekha Madhukar Jadhav
Husband's Name: Madhukar Jadhav
House Number : 323
Age : 37 Gender : Female
Photo Available

195 SYF2598076
Name : Ramchandra Limbaji Jadhav
Father's Name: Limbaji Jadhav
House Number : 323
Age : 34 Gender : Male
Photo Available

196 SYF3698727
Name : Naresh Bapurao Jadhav
Father's Name: Bapurao Jadhav
House Number : 323
Age : 31 Gender : Male
Photo Available

197 SYF2580678
Name : Pandit Gulab Jadhav
Father's Name: Gulab Jadhav
House Number : 326
Age : 35 Gender : Male
Photo Available

198 SYF2580686
Name : Balu Gulab Rathod
Father's Name: Gulab Rathod
House Number : 326
Age : 36 Gender : Male
Photo Available

199 SYF2580694
Name : Rama Gulab Rathod
Father's Name: Gulab Rathod
House Number : 326
Age : 36 Gender : Male
Photo Available

200 SYF1571629
Name : Saitra Babulal Rathod
Husband's Name: Babulal Rathod
House Number : 328
Age : 52 Gender : Female
Photo Available

201 SYF1818038
Name : Ganesh Lashkar Rathod
Father's Name: Lashkar Rathod
House Number : 335
Age : 52 Gender : Male
Photo Available

202 SYF3698909
Name : Rahul Digambar Jadhav
Father's Name: Digambar Jadhav
House Number : 336
Age : 26 Gender : Male
Photo Available

203 SYF2687580
Name : Mangilal Bhiku Rathod
Father's Name: Bhiku Rathod
House Number : 339
Age : 45 Gender : Male
Photo Available

204 SYF2687598
Name : Vanitabai Mangilal Rathod
Husband's Name: Mangilal Rathod
House Number : 339
Age : 42 Gender : Female
Photo Available

205 SYF3086030
Name : Pandit Bhiku Rathod
Father's Name: Bhiku Rathod
House Number : 339
Age : 36 Gender : Male
Photo Available

206 SYF4507463
Name : ramdas uttam rathod
Father's Name: uttam hari rathod
House Number : 339
Age : 24 Gender : Male
Photo Available

207 SYF2598092
Name : Shivaji Gangaram Jadhav
Father's Name: Gangaram Jadhav
House Number : 340
Age : 40 Gender : Male
Photo Available

208 SYF3325388
Name : Tanaji Gangaram Jadhav
Father's Name: Gangaram Jadhav
House Number : 340
Age : 31 Gender : Male
Photo Available

209 SYF3698602
Name : Ravsaheb Gulab Jadhav
Father's Name: Gulab Jadhav
House Number : 340
Age : 28 Gender : Male
Photo Available

210 SYF3698883
Name : Shantilal Gulab Jadhav
Father's Name: Gulab Jadhav
House Number : 340
Age : 27 Gender : Male
Photo Available

211 SYF4400248
Name : Gandhi Jadhav
Father's Name: Gulab Jadhav
House Number : 340
Age : 23 Gender : Male
Photo Available

212 SYF2598100
Name : Rohidas Mohan Chauhan
Father's Name: Mohan Chauhan
House Number : 341
Age : 34 Gender : Male
Photo Available

213 SYF3246535
Name : Chandrakala Rohidas Chavan
Husband's Name: Rohidas Chavan
House Number : 341
Age : 32 Gender : Female
Photo Available

214 BHW1486604
Name : Vijay Gunaji Chauhan
Father's Name: Gunaji Chauhan
House Number : 342
Age : 46 Gender : Male
Photo Available

215 SYF1571637
Name : Suresh Gunaji Chauhan
Father's Name: Gunaji Chauhan
House Number : 342
Age : 36 Gender : Male
Photo Available

216 SYF2598118
Name : Nandabai Suresh Chauhan
Husband's Name: Suresh Chauhan
House Number : 342
Age : 33 Gender : Female
Photo Available

217 SYF3086048
Name : Ashabai Mangilal Chavan
Husband's Name: Mangilal Chavan
House Number : 342
Age : 42 Gender : Female
Photo Available

218 SYF2580710
Name : LALITA SHESHARAO JADHAV
Husband's Name: Shesherao Jadhav
House Number : 345
Age : 50 Gender : Female
Photo Available

219 SYF2580728
Name : Vitthal Kisan Jadhav
Father's Name: Kisan Jadhav
House Number : 345
Age : 40 Gender : Male
Photo Available

220 SYF2580611
Name : Surekha Vitthal Jadhav
Husband's Name: Vitthal Jadhav
House Number : 345
Age : 35 Gender : Female
Photo Available

221 SYF3368727
Name : Atmaram Ganpat Jadhav
Father's Name: Ganpat Jadhav
House Number : 345
Age : 34 Gender : Male
Photo Available

222 SYF3368719
Name : Gajanan Kishan Jadhav
Father's Name: Kishan Jadhav
House Number : 345
Age : 28 Gender : Male
Photo Available

223 SYF3698859
Name : Vishatai Atmaram Jadhav
Husband's Name: Atmaram Jadhav
House Number : 345
Age : 26 Gender : Female
Photo Available

224 SYF2580736
Name : Pinku Namdev Jadhav
Husband's Name: Namdev Jadhav
House Number : 350
Age : 35 Gender : Female
Photo Available

225 SYF4399770
Name : Dnyaneshwar Jadhav
Father's Name: Subhash Jadhav
House Number : 351
Age : 29 Gender : Male
Photo Available

226 SYF4399788
Name : Parninta Jadhav
Husband's Name: Dnyaneshwar Jadhav
House Number : 351
Age : 28 Gender : Female
Photo Available

227 SYF4399796
Name : Ambadas Jadhav
Father's Name: Shasherao Jadhav
House Number : 352
Age : 26 Gender : Male
Photo Available

228 BHW1463249
Name : Sardar Ram Rao Jadhav
Father's Name: Ram Rao Jadhav
House Number : 353
Age : 45 Gender : Male
Photo Available

229 BHW1463181
Name : Anguribai Sardar Jadhav
Husband's Name: Sardar Jadhav
House Number : 353
Age : 42 Gender : Female
Photo Available

230 SYF1531318
Name : Jayashri Santosh Jadhav
Husband's Name: Santosh Jadhav
House Number : 356
Age : 38 Gender : Female
Photo Available

231 SYF3086055
Name : Parmeshwar Sakru Jadhav
Father's Name: Sakru Jadhav
House Number : 356
Age : 35 Gender : Male
Photo Available

232 SYF3626454
Name : Reshma Parmeshwar Jadhav
Husband's Name: Parmeshwar Jadhav
House Number : 356
Age : 27 Gender : Female
Photo Available

233 SYF1818095
Name : Premabai Ganesh Rathod
Father's Name: Ganesh Rathod
House Number : 358
Age : 47 Gender : Female
Photo Available

234 SYF1818087
Name : Ram Meghraj Rathod
Father's Name: Meghraj Rathod
House Number : 358
Age : 38 Gender : Male
Photo Available

235 SYF1818079
Name : Sunita Ram Rathod
Husband's Name: Ram Rathod
House Number : 358
Age : 35 Gender : Female
Photo Available

236 SYF1818061
Name : Laxman Meghraj Rathod
Father's Name: Meghraj Rathod
House Number : 358
Age : 34 Gender : Male
Photo Available

237 BHW1463876
Name : Sangitabai Shankar Jadhav
Husband's Name: Shankar Jadhav
House Number : 359
Age : 42 Gender : Female
Photo Available

238 BHW1463298
Name : Raju Dharma Jadhav
Father's Name: Dharma Jadhav
House Number : 360
Age : 40 Gender : Male
Photo Available

239 BHW1463330
Name : Vikash Dharma Jadhav
Father's Name: Dharma Jadhav
House Number : 360
Age : 38 Gender : Male
Photo Available

240 SYF2598126
Name : Savitabai Raju Jadhav
Husband's Name: Raju Jadhav
House Number : 360
Age : 38 Gender : Female
Photo Available

241 BHW1463009
Name : Babybhai Rohidas Ade
Husband's Name: Rohidas Ade
House Number : 361
Age : 58 Gender : Female
Photo Available

242 BHW1463587
Name : Yuvraj Rohidas Ade
Father's Name: Rohidas Ade
House Number : 361
Age : 40 Gender : Male
Photo Available

243 SYF3085909
Name : Vithabai Govind Rathod
Husband's Name: Govind Rathod
House Number : 361
Age : 35 Gender : Female
Photo Available

244 SYF2580769
Name : Sobha Chandra Jadhav
Father's Name: Chandra Jadhav
House Number : 362
Age : 40 Gender : Male
Photo Available

245 SYF2580744
Name : Vinod Dev Singh Rathod
Father's Name: Dev Singh Rathod
House Number : 366
Age : 40 Gender : Male
Photo Available

246 SYF2580751
Name : Savita Vinod Rathod
Husband's Name: Vinod Rathod
House Number : 366
Age : 39 Gender : Female
Photo Available

247 SYF3698610
Name : Vishvanath Devising Rathod
Father's Name: Devising Rathod
House Number : 366
Age : 31 Gender : Male
Photo Available

248 SYF3698834
Name : Minakshi Vishvanath Rathod
Husband's Name: Vishvanath Rathod
House Number : 366
Age : 29 Gender : Female
Photo Available

249 SYF2687606
Name : Godavaribai Santosh Jadhav
Husband's Name: Santosh Jadhav
House Number : 367
Age : 42 Gender : Female
Photo Available

250 SYF1531326
Name : Pandit Chandru Jadhav
Father's Name: Chandru Jadhav
House Number : 367
Age : 40 Gender : Male
Photo Available

251 SYF3501335
Name : Abhisek Sudam Jadhav
Father's Name: Sudam Jadhav
House Number : 369
Age : 30 Gender : Male
Photo Available

252 SYF1531334
Name : Anandrao Devala Rathod
Father's Name: Devala Rathod
House Number : 369
Age : 50 Gender : Male
Photo Available

253 BHW1463538
Name : Rukhamabai Anandrao Rathod
Husband's Name: Anandrao Rathod
House Number : 369
Age : 45 Gender : Female
Photo Available

254 SYF1531342
Name : Hanmant Maroti Ambure
Father's Name: Maroti Ambure
House Number : 375
Age : 38 Gender : Male
Photo Available

255 SYF3626603
Name : Padmagiri Ramji Ambhore
Father's Name: Ramji Ambhore
House Number : 377
Age : 40 Gender : Male
Photo Available

256 SYF3626660
Name : Digambar Ramji Ambure
Father's Name: Ramji Ambure
House Number : 377
Age : 29 Gender : Male
Photo Available

257 BHW1486539
Name : Tanaji Kondba Ambhore
Father's Name: Kondba Ambhore
House Number : 379
Age : 46 Gender : Male
Photo Available

258 BHW1486547
Name : Anita Tanaji Ambhore
Husband's Name: Tanaji Ambhore
House Number : 379
Age : 42 Gender : Female
Photo Available

259 BHW1493568
Name : Laxman Malhari Ambure
Father's Name: Malhari Ambure
House Number : 379
Age : 50 Gender : Male
Photo Available

260 SYF1531359
Name : Subhash Shesherao Huradukhe
Father's Name: Shesherao Huradukhe
House Number : 384
Age : 36 Gender : Male
Photo Available

261 SYF3394012
Name : Vishvanath Shesherao Hurduke
Father's Name: Shesherao Hurduke
House Number : 384
Age : 30 Gender : Male
Photo Available

262 SYF1531367
Name : Surekha Vitthal Huradukhe
Husband's Name: Vitthal Huradukhe
House Number : 385
Age : 38 Gender : Female
Photo Available

263 BHW1464288
Name : Vitthal Madhav Huradule
Father's Name: Madhav Huradule
House Number : 385
Age : 40 Gender : Male
Photo Available

264 SYF3085784
Name : Ramdas Mahadu Ambhore
Father's Name: Mahadu Ambhore
House Number : 386
Age : 51 Gender : Male
Photo Available

265 SYF3698636
Name : Vitthal Bhagorao Ambure
Father's Name: Bhagorao Ambure
House Number : 386
Age : 28 Gender : Male
Photo Available

266 BHW1462985
Name : Rama Raoji Gavale
Father's Name: Raoji Gavale
House Number : 389
Age : 48 Gender : Male
Photo Available

267 SYF2580595
Name : Sham Rao Raoji Gavale
Father's Name: Raoji Gavale
House Number : 389
Age : 45 Gender : Male
Photo Available

268 BHW1462936
Name : Sheshakalabai Rama Gavale
Father's Name: Rama Gavale
House Number : 389
Age : 38 Gender : Female
Photo Available

269 SYF3698628
Name : Sainath Ravaji Gavale
Father's Name: Ravaji Gavale
House Number : 389
Age : 30 Gender : Male
Photo Available

270 SYF3626520
Name : Godavadi Tukaram Gavale
Husband's Name: Tukaram Gavale
House Number : 389
Age : 30 Gender : Female
Photo Available

271 BHW1464270
Name : Rajeshwar Ramji Jhalke
Father's Name: Ramji Zakake
House Number : 391
Age : 50 Gender : Male
Photo Available

272 SYF3698917
Name : Vishvanath Ramji Zalake
Father's Name: Ramji Zalake
House Number : 391
Age : 30 Gender : Male
Photo Available

273 SYF3626553
Name : Sonali Chandrakant Raut
Husband's Name: Chandrakant Raut
House Number : 402
Age : 32 Gender : Female
Photo Available

274 SYF3698891
Name : Govind Uttam Rathod
Father's Name: Uttam Rathod
House Number : 501
Age : 27 Gender : Male
Photo Available

275 SYF3626710
Name : Jaypal Ganesh Rathod
Father's Name: Ganesh Rathod
House Number : 506
Age : 26 Gender : Male
Photo Available

276 SYF1539816
Name : Suresh Ramesh Rathod
Father's Name: Ramesh Rathod
House Number : 516
Age : 42 Gender : Male
Photo Available

277 SYF3698842
Name : Sindhubai Suresh Rathod
Husband's Name: Suresh Rathod
House Number : 516
Age : 33 Gender : Female
Photo Available

278 SYF2598134
Name : Parasram Ramesh Rathod
Father's Name: Ramesh Rathod
House Number : 518
Age : 37 Gender : Male
Photo Available

279 SYF3501384
Name : Ambadas Ramesh Rathod
Father's Name: Ramesh Rathod
House Number : 518
Age : 28 Gender : Male
Photo Available

280 SYF1818111
Name : Shankar Laxman Rakade
Father's Name: Laxman Rakade
House Number : 547
Age : 63 Gender : Male
Photo Available

281 SYF1826155
Name : Bebitai Shankar Rakade
Husband's Name: Shankar Rakade
House Number : 547
Age : 56 Gender : Female
Photo Available

282 SYF3085800
Name : Bhagaji Shankar Rakade
Father's Name: Shankar Rakade
House Number : 547
Age : 40 Gender : Male
Photo Available

283 SYF1818103
Name : Balaji Shankar Rakade
Father's Name: Shankar Rakade
House Number : 547
Age : 37 Gender : Male
Photo Available

284 SYF1826163
Name : Geetabai Balaji Rakade
Husband's Name: Balaji Rakade
House Number : 547
Age : 35 Gender : Female
Photo Available

285 SYF3085826
Name : Girjabai Bhagaji Rakade
Husband's Name: Bhagaji Rakade
House Number : 547
Age : 35 Gender : Female
Photo Available

286 BHW1463769
Name : Anil Waman Vakode
Father's Name: Waman Vakode
House Number : 672
Age : 46 Gender : Male
Photo Available

287 BHW1463413
Name : Sumitra Anil Vakode
Husband's Name: Anil Vakode
House Number : 672
Age : 43 Gender : Female
Photo Available

288 SYF3698552
Name : Kiran Ramji Wakode
Father's Name: Ramji Wakode
House Number : 672
Age : 30 Gender : Male
Photo Available

289 SYF3698537
Name : Vijay Ramji Wakode
Father's Name: Ramji Wakode
House Number : 672
Age : 27 Gender : Male
Photo Available

290 SYF3626579
Name : Shital Balaji Wakode
Husband's Name: Balaji Wakode
House Number : 672
Age : 26 Gender : Female
Photo Available

291 SYF3626652
Name : Balaji Ramji Vakode
Father's Name: Ramji Vakode
House Number : 672
Age : 29 Gender : Male
Photo Available

292 SYF2938280
Name : Rajeshwar Vaman Zalke
Father's Name: Vaman Zalke
House Number : 672
Age : 36 Gender : Male
Photo Available

293 SYF2938181
Name : Radha Rajeshwar Zalke
Husband's Name: Rajeshwar Zalke
House Number : 672
Age : 33 Gender : Female
Photo Available

294 SYF4564456
Name : Unkesh Charansing Chavhan
Father's Name: Charansing Chavhan
House Number : 0
Age : 21 Gender : Male
Photo Available

295 SYF4564464
Name : Pandurang Vasanta Agire
Father's Name: Vasanta Agire
House Number : 0
Age : 38 Gender : Male
Photo Available

296 SYF4564480
Name : Sonabai Hari Wanole
Husband's Name: Hari Wanole
House Number : 0
Age : 22 Gender : Female
Photo Available

297 SYF4564498
Name : Dipali Narayan Wanole
Husband's Name: Narayan Wanole
House Number : 0
Age : 24 Gender : Female
Photo Available

298 SYF2903433
Name : Vachhalabai Sandip Rathod
Husband's Name: Sandip Rathod
House Number : 0
Age : 35 Gender : Female
Photo Available

299 SYF4576948
Name : Maluka Jadhav
Husband's Name: Balaji Jadhav
House Number : 142
Age : 25 Gender : Female
Photo Available

300 SYF4576955
Name : Sathyasheela Rathod
Husband's Name: Krushna Rathod
House Number : 123
Age : 24 Gender : Female
Photo Available

301 SYF2903466
Name : Raju Viththal Rathod
Father's Name: Viththal Rathod
House Number : 12
Age : 42 Gender : Male
Photo Available

302 SYF2903375
Name : Sandip Viththal Rathod
Father's Name: Viththal Rathod
House Number : Pawana Tanda
Age : 46 Gender : Male
Photo Available

303 SYF4589297
Name : Pandurang Jadhav
Father's Name: Ganesh Jadhav
House Number : 10
Age : 20 Gender : Male
Photo Available

304 SYF4617486
Name : PRAVIN MADAN RATHOD
Father's Name: MADAN RATHOD
House Number : 0
Age : 23 Gender : Male
Photo Available

305 SYF4668463
Name : Uddhav Sandip Rathod
Father's Name: Sandip Rathod
House Number : 319
Age : 22 Gender : Male
Photo Available

306 SYF4669115
Name : Badal Sandip Rathod
Father's Name: Sandip Rathod
House Number : 328
Age : 24 Gender : Male
Photo Available

307 SYF4669198
Name : Ashatai Raju Jadhav
Husband's Name: Raju Jadhav
House Number : 39
Age : 26 Gender : Female
Photo Available

308 SYF4669404
Name : Mithun Sardar Jadhav
Father's Name: Sardar Jadhav
House Number : 312
Age : 20 Gender : Male
Photo Available

309 SYF4669917
Name : Champabai Rathod
Husband's Name: Balu Rathod
House Number : 326
Age : 22 Gender : Female
Photo Available

310 SYF4685947
Name : Anuradha Dhanraj Jadhav
Husband's Name: Dhanraj Jadhav
House Number : 101
Age : 25 Gender : Female
Photo Available

311 SYF4688180
Name : Sindhubai Shivlal Jadhav
Husband's Name: SHIVLAL JADHAV
House Number : 0
Age : 45 Gender : Female
Photo Available

312 SYF4762647
Name : Suman Ambadas Pawar
Husband's Name: Ambadas Pawar
House Number : 68
Age : 21 Gender : Female
Photo Available

313 SYF4762753
Name : Nisha Ramdas Rathod
Husband's Name: Ramdas Rathod
House Number : 142
Age : 21 Gender : Female
Photo Available

314 SYF4787180
Name : RINATAI DURGADAS RATHOD
Husband's Name: DURGADAS RATHOD
House Number : 0
Age : 23 Gender : Female
Photo Available

315 SYF4795985
Name : dhanlal santosh jadhav jadhav
Father's Name: santosh jayram jadhav jadhav
House Number : 0
Age : 20 Gender : Male
Photo Available

316 SYF4813788
Name : KALPANABAI ULHAS JADHAV
Husband's Name: ULHAS JADHAV
House Number : 0
Age : 40 Gender : Female
Photo Available

317 SYF4820734
Name : Omkant Arjun Chavhan
Father's Name: Arjun Chavhan
House Number : 0
Age : 21 Gender : Male
Photo Available

318 SYF4823944
Name : Nagesh Laxman Ambore
Father's Name: Laxman Ambore
House Number : 0
Age : 20 Gender : Male
Photo Available

319 SYF4823951
Name : Kondba Honaji Ambhore
Father's Name: Honaji Ambhore
House Number : 0
Age : 20 Gender : Male
Photo Available

320 SYF4829925
Name : Reshamabai Babalu Ade
Husband's Name: Babalu Ade
House Number : 25
Age : 24 Gender : Female
Photo Available

321 SYF4831483
Name : Gokul Santosh Rathod
Father's Name: Satosh Rathod
House Number : 309
Age : 20 Gender : Male
Photo Available

322 SYF4836086
Name : Laxmibai Sakundrav Rathod
Father's Name: Sakundrav Rathod
House Number : 311
Age : 20 Gender : Female
Photo Available

323 SYF4837639
Name : Sairaj Ramdas Rathod
Father's Name: Ramdas Rathod
House Number : 306
Age : 20 Gender : Male
Photo Available

324 SYF4838223
Name : Sushmita Sanjay Pawar
Husband's Name: Sanjay Devrav pawar
House Number : 310
Age : 27 Gender : Female
Photo Available

325 SYF4839866
Name : Sima Balaji Rathod
Husband's Name: Balaji Rathod
House Number : 00
Age : 23 Gender : Female
Photo Available

326 SYF3325461
Name : Archana Nitin Rathod
Husband's Name: Nitin Rathod
House Number :
Age : 32 Gender : Female
Photo Available

327 SYF3325446
Name : Kavita Ramchandra Jadhav
Husband's Name: Ramchandra Jadhav
House Number : 121
Age : 31 Gender : Female
Photo Available

328 SYF3832805
Name : Kishan Ramchandra Rathod
Father's Name: Ramchandra Rathod
House Number : 303
Age : 65 Gender : Male
Photo Available

329 SYF3832813
Name : Parbatabai Kishan Rathod
Husband's Name: Kishan Rathod
House Number : 303
Age : 65 Gender : Female
Photo Available

330 BHW1463843
Name : Jay Singh Kishanrao Rathod
Father's Name: Kishanrao Rathod
House Number : 303
Age : 46 Gender : Male
Photo Available

331 SYF3085925
Name : Savitribai Jayram Jadhav
Husband's Name: Jayram Jadhav
House Number : 304
Age : 62 Gender : Female
Photo Available

332 SYF3832839
Name : Kantabai Dilip Jadhav
Husband's Name: Dilip Jadhav
House Number : 305
Age : 64 Gender : Female
Photo Available

333 BHW1462720
Name : Dhanu Roda Rathod
Father's Name: Roda Rathod
House Number : 306
Age : 67 Gender : Male
Photo Available

334 BHW1486729
Name : Parubai Dhanu Rathod
Husband's Name: Dhanu Rathod
House Number : 306
Age : 62 Gender : Female
Photo Available

335 BHW1464171
Name : Devidas Dhanu Rathod
Father's Name: Dhenu Rathod
House Number : 306
Age : 49 Gender : Male
Photo Available

336 BHW1462811
Name : Ramdas Dhanu Rathod
Father's Name: Dhanu Rathod
House Number : 306
Age : 45 Gender : Male
Photo Available

337 BHW1463389
Name : Shobhabai Devidas Rathod
Husband's Name: Devidas Rathod
House Number : 306
Age : 44 Gender : Female
Photo Available

338 BHW1463819
Name : Dhurabai Poma Jadhav
Husband's Name: Poma Jadhav
House Number : 307
Age : 92 Gender : Female
Photo Available

339 SYF3832862
Name : Bapurao Poma Jadhav
Father's Name: Poma Jadhav
House Number : 307
Age : 62 Gender : Male
Photo Available

340 BHW1462803
Name : Laxmi Bai Bapurao Jadhav
Husband's Name: Bapurao Jadhav
House Number : 307
Age : 54 Gender : Female
Photo Available

341 SYF3832870
Name : Gulab Poma Jadhav
Father's Name: Poma Jadhav
House Number : 307
Age : 50 Gender : Male
Photo Available

342 SYF3832888
Name : Vasant Phool Singh Rathod
Father's Name: Phool Singh Rathod
House Number : 308
Age : 55 Gender : Male
Photo Available

343 SYF3832896
Name : Kavitabai Vasant Rathod
Husband's Name: Vasant Rathod
House Number : 308
Age : 52 Gender : Female
Photo Available

344 BHW1462779
Name : Badhu Bhoju Rathod
Father's Name: Bhoju Rathod
House Number : 309
Age : 80 Gender : Male
Photo Available

345 BHW1462712
Name : Meerabai Badhu Rathod
Husband's Name: Badhu Rathod
House Number : 309
Age : 72 Gender : Female
Photo Available

346 SYF3832938
Name : Sarjabai Baliram Pawar
Husband's Name: Baliram Pawar
House Number : 310
Age : 77 Gender : Female
Photo Available

347 SYF3832946
Name : Devrao Baliram Pawar
Father's Name: Baliram Pawar
House Number : 310
Age : 52 Gender : Male
Photo Available

348 SYF2687614
Name : Anitabai Devrao Pawar
Husband's Name: Devrao Pawar
House Number : 310
Age : 49 Gender : Female
Photo Available

349 SYF2687622
Name : Ramdas Baliram Pawar
Father's Name: Baliram Pawar
House Number : 310
Age : 43 Gender : Male
Photo Available

350 SYF2687630
Name : Savitra Ramdas Pawar
Husband's Name: Ramdas Pawar
House Number : 310
Age : 42 Gender : Female
Photo Available

351 SYF3832953
Name : Jeejabai Dharma Jadhav
Husband's Name: Dharma Jadhav
House Number : 311
Age : 67 Gender : Female
Photo Available

352 BHW1463371
Name : Sumanbai Ramdas Rathod
Husband's Name: Ramdas Rathod
House Number : 311
Age : 43 Gender : Female
Photo Available

353 BHW1462894
Name : Mukundrao Dharma Rathod
Father's Name: Dharma Rathod
House Number : 311
Age : 42 Gender : Male
Photo Available

354 SYF3832979
Name : Parubai Rupla Jadhav
Husband's Name: Rupla Jadhav
House Number : 312
Age : 74 Gender : Female
Photo Available

355 SYF3832987
Name : Sarjabai Shankar Ade
Husband's Name: Shankar Ade
House Number : 314
Age : 69 Gender : Female
Photo Available

356 SYF2687648
Name : Kailash Bhimrao Ade
Father's Name: Bhimrao Ade
House Number : 314
Age : 43 Gender : Male
Photo Available

357 SYF2687655
Name : Koshalyabai Kailash Ade
Husband's Name: Kailash Ade
House Number : 314
Age : 42 Gender : Female
Photo Available

358 SYF2598068
Name : Lakhan Shankar Ade
Father's Name: Shankar Ade
House Number : 314
Age : 38 Gender : Male
Photo Available

359 SYF3325412
Name : Ushabai Lakhan Ade
Husband's Name: Lakhan Ade
House Number : 314
Age : 32 Gender : Female
Photo Available

360 BHW1463405
Name : Sumanbai Babu Rathod
Father's Name: Babu Rathod
House Number : 314
Age : 58 Gender : Female
Photo Available

361 BHW1463439
Name : Neelabai Subhash Rathod
Husband's Name: Subhash Rathod
House Number : 314
Age : 50 Gender : Female
Photo Available

362 SYF3394152
Name : Sona Vilas Rathod
Husband's Name: Vilas Rathod
House Number : 314
Age : 34 Gender : Female
Photo Available

363 BHW1463744
Name : Nandu Ramasigan Ade
Father's Name: Ramasigan Ade
House Number : 316
Age : 60 Gender : Male
Photo Available

364 BHW1463496
Name : Shashikala Nandu Ade
Husband's Name: Nandu Ade
House Number : 316
Age : 57 Gender : Female
Photo Available

365 BHW1464312
Name : Bhimrao Baba Chauhan
Father's Name: Baba Chauhan
House Number : 317
Age : 57 Gender : Male
Photo Available

366 SYF3368792
Name : Vandana Avinash Chavhan
Husband's Name: Avinash Chavhan
House Number : 317
Age : 31 Gender : Female
Photo Available

367 SYF3832995
Name : Shivram Baba Jadhav
Father's Name: Baba Jadhav
House Number : 317
Age : 67 Gender : Male
Photo Available

368 SYF1531417
Name : Shantabai Shivram Jadhav
Husband's Name: Shivram Jadhav
House Number : 317
Age : 62 Gender : Female
Photo Available

369 SYF1531425
Name : Devidas Shivram Jadhav
Father's Name: Shivram Jadhav
House Number : 317
Age : 37 Gender : Male
Photo Available

370 SYF3833019
Name : Babybhai Jaivant Rathod
Husband's Name: Jaivant Rathod
House Number : 318
Age : 71 Gender : Female
Photo Available

371 SYF3833035
Name : Simabai Rupla Rathod
Husband's Name: Rupla Rathod
House Number : 319
Age : 74 Gender : Female
Photo Available

372 BHW1463785
Name : Tukaram Rupla Rathod
Father's Name: Rupla Rathod
House Number : 319
Age : 75 Gender : Male
Photo Available

373 SYF3833043
Name : Vimlabai Tukaram Rathod
Husband's Name: Tukaram Rathod
House Number : 319
Age : 51 Gender : Female
Photo Available

374 SYF2687663
Name : Narayan Rupla Rathod
Father's Name: Rupla Rathod
House Number : 319
Age : 47 Gender : Male
Photo Available

375 SYF3833050
Name : Gangubai Chudaman Jadhav
Husband's Name: Chudaman Jadhav
House Number : 320
Age : 92 Gender : Female
Photo Available

376 SYF1531433
Name : Balaji Chudaman Jadhav
Father's Name: Chudaman Jadhav
House Number : 320
Age : 52 Gender : Male
Photo Available

377 BHW1463603
Name : Taibai Laxman Jadhav
Husband's Name: Laxman Jadhav
House Number : 320
Age : 49 Gender : Female
Photo Available

378 BHW1463637
Name : Mathurabai Laxman Jadhav
Husband's Name: Laxman Jadhav
House Number : 320
Age : 43 Gender : Female
Photo Available

379 BHW1486406
Name : Laxman Raoji Jadhav
Father's Name: Raoji Jadhav
House Number : 320
Age : 43 Gender : Male
Photo Available

380 SYF3833076
Name : Kalavatibai Laxman Jadhav
Husband's Name: Laxman Jadhav
House Number : 321
Age : 62 Gender : Female
Photo Available

381 SYF3833084
Name : Kantabai Ramji Jadhav
Husband's Name: Ramji Jadhav
House Number : 321
Age : 62 Gender : Female
Photo Available

382 SYF3325438
Name : Shankar Ramji Jadhav
Father's Name: Ramji Jadhav
House Number : 321
Age : 32 Gender : Male
Photo Available

383 SYF1539840
Name : Govind Ramesh Rathod
Father's Name: Ramesh Rathod
House Number : 321
Age : 42 Gender : Male
Photo Available

384 SYF1539857
Name : Suryakanta Govind Rathod
Father's Name: Govind Rathod
House Number : 321
Age : 42 Gender : Male
Photo Available

385 BHW1463728
Name : Gulab Chudaman Jadhav
Father's Name: Chudaman Jadhav
House Number : 322
Age : 59 Gender : Male
Photo Available

386 SYF3833092
Name : Limbaji Kaniram Jadhav
Father's Name: Kaniram Jadhav
House Number : 323
Age : 70 Gender : Male
Photo Available

387 SYF3833100
Name : Shevantabai Limbaji Jadhav
Husband's Name: Limbaji Jadhav
House Number : 323
Age : 64 Gender : Female
Photo Available

388 SYF3833142
Name : Bapurao Roda Rathod
Father's Name: Roda Rathod
House Number : 326
Age : 66 Gender : Male
Photo Available

389 SYF3833159
Name : Gulab Roda Rathod
Father's Name: Roda Rathod
House Number : 326
Age : 62 Gender : Male
Photo Available

390 SYF3833167
Name : Shevanti Gulab Rathod
Husband's Name: Gulab Rathod
House Number : 326
Age : 57 Gender : Female
Photo Available

391 SYF3833647
Name : Panchabai Baburao Rathod
Husband's Name: Bapurao Rathod
House Number : 327
Age : 62 Gender : Female
Photo Available

392 SYF3833175
Name : Babulal Nanu Rathod
Father's Name: Nanu Rathod
House Number : 328
Age : 56 Gender : Male
Photo Available

393 SYF3833183
Name : Amu Shivlal Jadhav
Father's Name: Shivlal Jadhav
House Number : 335
Age : 84 Gender : Male
Photo Available

394 SYF2687671
Name : Santosh Jayvantrao Jadhav
Father's Name: Jayvantrao Jadhav
House Number : 335
Age : 47 Gender : Male
Photo Available

395 SYF3833217
Name : Prakash Motiram Jadhav
Father's Name: Motiram Jadhav
House Number : 336
Age : 67 Gender : Male
Photo Available

396 SYF3833225
Name : Neelabai Prakash Jadhav
Husband's Name: Prakash Jadhav
House Number : 336
Age : 62 Gender : Female
Photo Available

397 BHW1464254
Name : Digambar Motiram Jadhav
Father's Name: Motiram Jadhav
House Number : 336
Age : 59 Gender : Male
Photo Available

398 SYF3833233
Name : Neelabai Digambar Jadhav
Husband's Name: Digambar Jadhav
House Number : 336
Age : 54 Gender : Female
Photo Available

399 SYF3833241
Name : Vitthal Motiram Jadhav
Father's Name: Motiram Jadhav
House Number : 336
Age : 51 Gender : Male
Photo Available

400 BHW1486513
Name : Sunitabai Vitthal Jadhav
Husband's Name: Vitthal Jadhav
House Number : 336
Age : 48 Gender : Female
Photo Available

401 SYF3833258
Name : Bhiku Hari Rathod
Father's Name: Hari Rathod
House Number : 339
Age : 77 Gender : Male
Photo Available

402 SYF3833266
Name : Neelabai Bhiku Rathod
Husband's Name: Bhiku Rathod
House Number : 339
Age : 72 Gender : Female
Photo Available

403 SYF3833274
Name : Uttam Hari Rathod
Father's Name: Hari Rathod
House Number : 339
Age : 57 Gender : Male
Photo Available

404 SYF3833282
Name : Panchibai Uttam Rathod
Husband's Name: Uttam Rathod
House Number : 339
Age : 52 Gender : Female
Photo Available

405 SYF1539824
Name : Gangaram Amaru Jadhav
Father's Name: Amaru Jadhav
House Number : 340
Age : 70 Gender : Male
Photo Available

406 SYF3833308
Name : Sulochana Gangaram Jadhav
Husband's Name: Gangaram Jadhav
House Number : 340
Age : 64 Gender : Female
Photo Available

407 SYF3833316
Name : Gulab Amaru Jadhav
Father's Name: Amaru Jadhav
House Number : 340
Age : 62 Gender : Male
Photo Available

408 SYF3833324
Name : Sushila Gulab Jadhav
Husband's Name: Gulab Jadhav
House Number : 340
Age : 57 Gender : Female
Photo Available

409 SYF1552918
Name : Bhikanabai Gulab Jadhav
Husband's Name: Gulab Jadhav
House Number : 340
Age : 48 Gender : Female
Photo Available

410 SYF3325453
Name : Jyoti Shivaji Jadhav
Husband's Name: Shivaji Jadhav
House Number : 340
Age : 39 Gender : Female
Photo Available

411 SYF0616716
Name : Mohan Har Singh Chauhan
Father's Name: Har Singh Chauhan
House Number : 341
Age : 73 Gender : Male
Photo Available

412 SYF0616732
Name : Arjun Gunaji Chauhan
Father's Name: Gunaji Chauhan
House Number : 342
Age : 54 Gender : Male
Photo Available

413 BHW1463553
Name : Kantabai Vijay Chauhan
Husband's Name: Vijay Chauhan
House Number : 342
Age : 44 Gender : Female
Photo Available

414 BHW1462928
Name : Mangilal Gunaji Chauhan
Father's Name: Gunaji Chauhan
House Number : 342
Age : 43 Gender : Male
Photo Available

415 SYF3085933
Name : Janabai Kishan Jadhav
Husband's Name: Kishan Jadhav
House Number : 345
Age : 82 Gender : Female
Photo Available

416 SYF0616766
Name : Ganpat Kishan Jadhav
Father's Name: Kishan Jadhav
House Number : 345
Age : 52 Gender : Male
Photo Available

417 BHW1462910
Name : Lalu Kishan Jadhav
Father's Name: Kishan Jadhav
House Number : 345
Age : 50 Gender : Male
Photo Available

418 BHW1462746
Name : Aruna Lalu Jadhav
Husband's Name: Lalu Jadhav
House Number : 345
Age : 46 Gender : Female
Photo Available

419 SYF1558261
Name : Lalitabai Ganpat Jadhav
Husband's Name: Ganpat Jadhav
House Number : 347
Age : 51 Gender : Female
Photo Available

420 SYF3833381
Name : Neelabai Gulab Jadhav
Husband's Name: Gulab Jadhav
House Number : 348
Age : 54 Gender : Female
Photo Available

421 SYF1539832
Name : Anusayabai Raoji Jadhav
Husband's Name: Raoji Jadhav
House Number : 349
Age : 70 Gender : Female
Photo Available

422 BHW1463512
Name : Vinabai Balaji Jadhav
Husband's Name: Balaji Jadhav
House Number : 349
Age : 48 Gender : Female
Photo Available

423 BHW1462761
Name : Anusayabai Ashok Jadhav
Husband's Name: Ashok Jadhav
House Number : 349
Age : 44 Gender : Female
Photo Available

424 SYF3833399
Name : Khiru Gangaram Jadhav
Father's Name: Gangaram Jadhav
House Number : 350
Age : 64 Gender : Male
Photo Available

425 SYF3833407
Name : Sakhubai Khiru Jadhav
Husband's Name: Khiru Jadhav
House Number : 350
Age : 60 Gender : Female
Photo Available

426 SYF3833415
Name : Mohan Chapla Jadhav
Father's Name: Chapla Jadhav
House Number : 351
Age : 87 Gender : Male
Photo Available

427 SYF3833423
Name : Sarjabai Mohan Jadhav
Husband's Name: Mohan Jadhav
House Number : 351
Age : 82 Gender : Female
Photo Available

428 SYF0616855
Name : Dhavjee Chapla Jadhav
Father's Name: Chapla Jadhav
House Number : 351
Age : 67 Gender : Male
Photo Available

429 SYF3833431
Name : Subhash Mohan Jadhav
Father's Name: Mohan Jadhav
House Number : 351
Age : 54 Gender : Male
Photo Available

430 BHW1463546
Name : Shobha Subhash Jadhav
Husband's Name: Subhash Jadhav
House Number : 351
Age : 49 Gender : Female
Photo Available

431 BHW1463579
Name : Lkshamibai Rohidas Jadhav
Husband's Name: Rohidas Jadhav
House Number : 351
Age : 46 Gender : Female
Photo Available

432 SYF3833449
Name : Shobhabai Dhavjee Jadhav
Husband's Name: Dhavjee Jadhav
House Number : 352
Age : 62 Gender : Female
Photo Available

433 SYF3833456
Name : Ram Rao Tikaram Jadhav
Father's Name: Tikaram Jadhav
House Number : 353
Age : 69 Gender : Male
Photo Available

434 SYF3833464
Name : RUKHMABAI RAMRAO JADHAV
Husband's Name: Ram Rao Jadhav
House Number : 353
Age : 64 Gender : Female
Photo Available

435 SYF3833472
Name : Arjun Chapla Jadhav
Father's Name: Chapla Jadhav
House Number : 353
Age : 54 Gender : Male
Photo Available

436 SYF3833480
Name : Bhimrao Chapla Jadhav
Father's Name: Chapla Jadhav
House Number : 353
Age : 52 Gender : Male
Photo Available

437 BHW1463678
Name : Asha Bhimrao Jadhav
Husband's Name: Bhimrao Jadhav
House Number : 353
Age : 50 Gender : Female
Photo Available

438 SYF3833498
Name : Shevantibai Arjun Jadhav
Husband's Name: Arjun Jadhav
House Number : 353
Age : 49 Gender : Female
Photo Available

439 SYF1818046
Name : Ulhaas Ram Rao Jadhav
Father's Name: Ram Rao Jadhav
House Number : 353
Age : 36 Gender : Male
Photo Available

440 SYF0617005
Name : Sakru Nama Jadhav
Father's Name: Nama Jadhav
House Number : 356
Age : 87 Gender : Male
Photo Available

441 SYF0617013
Name : Radha Bai Sakru Jadhav
Husband's Name: Sakru Jadhav
House Number : 356
Age : 83 Gender : Female
Photo Available

442 SYF3833514
Name : Laxman Saku Jadhav
Father's Name: Saku Jadhav
House Number : 356
Age : 54 Gender : Male
Photo Available

443 BHW1463223
Name : Santosh Sakru Jadhav
Father's Name: Sakru Jadhav
House Number : 356
Age : 45 Gender : Male
Photo Available

444 BHW1463702
Name : Sanjay Sakru Jadhav
Father's Name: Sakru Jadhav
House Number : 356
Age : 43 Gender : Male
Photo Available

445 SYF3394145
Name : Raju Laxman Jadhav
Father's Name: Laxman Jadhav
House Number : 356
Age : 29 Gender : Male
Photo Available

446 SYF3833522
Name : Meghraj Gulab Rathod
Father's Name: Gulab Rathod
House Number : 358
Age : 74 Gender : Male
Photo Available

447 SYF3833530
Name : Girjabai Meghraj Rathod
Husband's Name: Meghraj Rathod
House Number : 358
Age : 67 Gender : Female
Photo Available

448 SYF3833191
Name : Sumanbai Taru Jadhav
Husband's Name: Taru Jadhav
House Number : 359
Age : 69 Gender : Female
Photo Available

449 SYF1516004
Name : Shivlal Taru Jadhav
Father's Name: Taru Jadhav
House Number : 359
Age : 50 Gender : Male
Photo Available

450 SYF1531441
Name : Shakanr Taru Jadhav
Father's Name: Taru Jadhav
House Number : 359
Age : 42 Gender : Male
Photo Available

451 SYF0617021
Name : Dharma Tikaram Jadhav
Father's Name: Tikaram Jadhav
House Number : 360
Age : 77 Gender : Male
Photo Available

452 SYF3833548
Name : Gaurubai Dharma Jadhav
Husband's Name: Dharma Jadhav
House Number : 360
Age : 72 Gender : Female
Photo Available

453 BHW1463462
Name : Vimalbai Namdev Jadhav
Husband's Name: Namdev Jadhav
House Number : 360
Age : 54 Gender : Female
Photo Available

454 SYF1531458
Name : Dharmasig Chadaru Jadhav
Father's Name: Chadaru Jadhav
House Number : 360
Age : 49 Gender : Male
Photo Available

455 SYF2687705
Name : Sunabai Uttam Jadhav
Husband's Name: Uttam Jadhav
House Number : 360
Age : 48 Gender : Female
Photo Available

456 BHW1463488
Name : Vimalbai Rohidas Jadhav
Husband's Name: Rohidas Jadhav
House Number : 360
Age : 48 Gender : Female
Photo Available

457 SYF1531466
Name : Kamlabai Dharmasig Jadhav
Husband's Name: Dharmasig Jadhav
House Number : 360
Age : 46 Gender : Female
Photo Available

458 SYF1558287
Name : Rohidas Dharma Jadhav
Father's Name: Dharma Jadhav
House Number : 360
Age : 45 Gender : Male
Photo Available

459 SYF2687697
Name : Uttam Dharma Jadhav
Father's Name: Dharma Jadhav
House Number : 360
Age : 45 Gender : Male
Photo Available

460 BHW1463447
Name : Anita Sanjay Jadhav
Husband's Name: Sanjay Jadhav
House Number : 360
Age : 43 Gender : Female
Photo Available

461 SYF3833555
Name : Bapurao Tikaram Jadhav
Father's Name: Tikaram Jadhav
House Number : 361
Age : 64 Gender : Male
Photo Available

462 SYF3833563
Name : Suman Bapurao Jadhav
Husband's Name: Bapurao Jadhav
House Number : 361
Age : 60 Gender : Female
Photo Available

463 SYF1531474
Name : Rupla Babu Rathod
Father's Name: Babu Rathod
House Number : 361
Age : 67 Gender : Male
Photo Available

464 SYF3832961
Name : Shantabai Dharma Rathod
Husband's Name: Dharma Rathod
House Number : 361
Age : 62 Gender : Female
Photo Available

465 BHW1464056
Name : Shankar Rupla Rathod
Father's Name: Rupla Jadhav
House Number : 364
Age : 77 Gender : Male
Photo Available

466 BHW1462852
Name : Parubai Shankar Rathod
Husband's Name: Shankar Rathod
House Number : 364
Age : 72 Gender : Female
Photo Available

467 SYF1531482
Name : Renukabai Babu Rathod
Husband's Name: Babu Rathod
House Number : 364
Age : 59 Gender : Female
Photo Available

468 SYF4464632
Name : Swatibai Rathod
Husband's Name: Santosh Rathod
House Number : 364
Age : 30 Gender : Female
Photo Available

469 SYF3833290
Name : Vimalbai Lal Singh Rathod
Husband's Name: Lalsingh Rathod
House Number : 365
Age : 62 Gender : Female
Photo Available

470 SYF3833571
Name : Parubai Dev Singh Rathod
Husband's Name: Dev Singh Rathod
House Number : 366
Age : 60 Gender : Female
Photo Available

471 SYF3833597
Name : Bayanabai Chandru Jadhav
Husband's Name: Chandru Jadhav
House Number : 367
Age : 82 Gender : Female
Photo Available

472 SYF1552926
Name : Santosh Jairam Jadhav
Father's Name: Jairam Jadhav
House Number : 367
Age : 44 Gender : Male
Photo Available

473 SYF0617146
Name : Bhimrao Manu Ade
Father's Name: Manu Ade
House Number : 368
Age : 77 Gender : Male
Photo Available

474 SYF2687713
Name : Sudam Kishan Jadhav
Father's Name: Kishan Jadhav
House Number : 369
Age : 53 Gender : Male
Photo Available

475 SYF2687721
Name : Chandrakala Sudam Jadhav
Husband's Name: Sudam Jadhav
House Number : 369
Age : 50 Gender : Female
Photo Available

476 SYF3833621
Name : Bharat Narayan Rathod
Father's Name: Narayan Rathod
House Number : 393
Age : 53 Gender : Male
Photo Available

477 BHW1486448
Name : Bebabai Bharat Rathod
Husband's Name: Bharat Rathod
House Number : 393
Age : 50 Gender : Female
Photo Available

478 SYF3833639
Name : Krishna Narayan Rathod
Father's Name: Narayan Rathod
House Number : 393
Age : 46 Gender : Male
Photo Available

479 BHW1463850
Name : Shevantabai Krishna Rathod
Father's Name: Krishna Rathod
House Number : 393
Age : 45 Gender : Female
Photo Available

480 BHW1462738
Name : Datta Narayan Rathod
Father's Name: Narayan Rathod
House Number : 393
Age : 42 Gender : Male
Photo Available

481 SYF2687739
Name : Vandana Datta Rathod
Father's Name: Datta Rathod
House Number : 393
Age : 38 Gender : Female
Photo Available

482 SYF0617211
Name : Yashodabai Ramesh Rathod
Husband's Name: Ramesh Rathod
House Number : 518
Age : 66 Gender : Female
Photo Available

483 SYF0617203
Name : Ramesh Bapurao Rathod
Father's Name: Bapurao Rathod
House Number : 518
Age : 63 Gender : Male
Photo Available

484 BHW1462969
Name : Ashok Gangaram Jadhav
Father's Name: Gangaram Jadhav
House Number : 526a
Age : 44 Gender : Male
Photo Available

485 BHW1464320
Name : Devkabai Bhimrao Chauhan
Husband's Name: Bhimrao Chauhan
House Number : 670
Age : 52 Gender : Female
Photo Available

486 SYF3833605
Name : Jaivant Phool Singh Rathod
Father's Name: Phool Singh Rathod
House Number : 369 4
Age : 64 Gender : Male
Photo Available

487 SYF3833613
Name : Silabai Jaivant Rathod
Husband's Name: Jaivant Rathod
House Number : 369 4
Age : 59 Gender : Female
Photo Available

488 BHW1486455
Name : Sakindar Ful Singh Rathod
Father's Name: Ful Singh Rathod
House Number : 369 4
Age : 43 Gender : Male
Photo Available

489 BHW1486463
Name : Surekhabai Sakindar Rathod
Husband's Name: Sakindar Rathod
House Number : 369 4
Age : 42 Gender : Female
Photo Available

490 SYF4577672
Name : Balaji Rathod
Father's Name: Devidas Rathod
House Number : 306
Age : 22 Gender : Male
Photo Available

491 SYF4578373
Name : Kapil Rathod
Father's Name: ramdas Rathod
House Number : 120
Age : 22 Gender : Male
Photo Available

492 SYF4624722
Name : punyaratha santosh jadhav
Father's Name: santosh jairam jadhav
House Number : 0
Age : 24 Gender : Female
Photo Available

493 SYF4662078
Name : Narayan Gulab Jadhav
Father's Name: Gulab Jadhav
House Number : 185
Age : 21 Gender : Male
Photo Available

494 SYF4669909
Name : chavalibai gulab jadhav
Husband's Name: gulab jadhav
House Number : 185
Age : 47 Gender : Female
Photo Available

495 SYF4669941
Name : Durgadas Babulal Rathod
Father's Name: Babulal Rathod
House Number : 328
Age : 21 Gender : Male
Photo Available

496 SYF4822276
Name : Sushil Ashok Jadhav
Father's Name: Ashok Gangaram Jadhav
House Number : 526
Age : 21 Gender : Male
Photo Available

497 SYF3325479
Name : Shakuntala Pundlik Adhav
Husband's Name: Pundlik Adhav
House Number :
Age : 33 Gender : Female
Photo Available

498 SYF3325487
Name : Chandraklabai Ganpat Khaupse
Husband's Name: Ganpat Khaupse
House Number :
Age : 61 Gender : Female
Photo Available

499 SYF4547485
Name : CHANDDEV SHIVAJI GAVLE
Father's Name: SHIVAJI GAVLE
House Number : 14
Age : 25 Gender : Male
Photo Available

500 BHW1463165
Name : Prakash Parasram Vanole
Father's Name: Parasram Vanole
House Number : 197
Age : 64 Gender : Male
Photo Available

501 BHW1463033
Name : Shakuntala Prakash Vanole
Father's Name: Prakash Vanole
House Number : 197
Age : 57 Gender : Female
Photo Available

502 SYF0617229
Name : Pandurang Laxman Gayakwad
Father's Name: Laxman Gayakwad
House Number : 373
Age : 51 Gender : Male
Photo Available

503 BHW1463900
Name : Shesherao Laxman Gayakwad
Father's Name: Laxman Gayakwad
House Number : 373
Age : 50 Gender : Male
Photo Available

504 BHW1462977
Name : Parvatibai Shankar Ambhor
Father's Name: Shankar Ambhor
House Number : 376
Age : 48 Gender : Female
Photo Available

505 SYF3832615
Name : Shivaji Narayan Ambhore
Father's Name: Narayan Ambhore
House Number : 376
Age : 54 Gender : Male
Photo Available

506 SYF3832623
Name : Shankar Narayan Ambhore
Father's Name: Narayan Ambhore
House Number : 376
Age : 50 Gender : Male
Photo Available

507 BHW1463421
Name : Godavari Shivaji Ambhore
Father's Name: Shivaji Ambhore
House Number : 376
Age : 48 Gender : Female
Photo Available

508 SYF3832649
Name : Kamlabai Ramji Ambhore
Husband's Name: Ramji Ambhore
House Number : 377
Age : 67 Gender : Female
Photo Available

509 BHW1486521
Name : Sunita Honajee Abore
Husband's Name: Honajee Abore
House Number : 379
Age : 42 Gender : Female
Photo Available

510 BHW1486497
Name : Honajee Kondba Ambhore
Father's Name: Kondba Ambhore
House Number : 379
Age : 44 Gender : Male
Photo Available

511 BHW1463892
Name : Parmeshwar Nagorav Ambhore
Father's Name: Nagorav Ambhore
House Number : 379
Age : 43 Gender : Male
Photo Available

512 SYF3832672
Name : Sheshrao Mahadu Huradukhe
Father's Name: Mahadu Huradukhe
House Number : 384
Age : 62 Gender : Male
Photo Available

513 SYF1531516
Name : Vimlabai Sheshrao Huradukhe
Husband's Name: Sheshrao Huradukhe
House Number : 384
Age : 54 Gender : Female
Photo Available

514 BHW1463868
Name : Baloo Mahadu Hurduke
Father's Name: Mahadu Hurduke
House Number : 384
Age : 53 Gender : Male
Photo Available

515 BHW1463314
Name : Anjan Balu Hurduke
Husband's Name: Balu Hurduke
House Number : 384
Age : 50 Gender : Female
Photo Available

516 SYF3832698
Name : Maroti Mahadu Huradukhe
Father's Name: Mahadu Huradukhe
House Number : 385
Age : 62 Gender : Male
Photo Available

517 BHW1462902
Name : Laxmi Bai Ramdas Ambhor
Husband's Name: Ramdas Ambhor
House Number : 386
Age : 46 Gender : Female
Photo Available

518 SYF0617370
Name : Bhagorav Vitthal Ambhore
Father's Name: Vitthal Ambhore
House Number : 386
Age : 66 Gender : Male
Photo Available

519 SYF3832722
Name : Sundarabai Nagorav Ambhore
Husband's Name: Nagorav Ambhore
House Number : 386
Age : 62 Gender : Female
Photo Available

520 SYF3832730
Name : Gangabai Mahadu Ambhore
Husband's Name: Mahadu Ambhore
House Number : 387
Age : 87 Gender : Female
Photo Available

521 BHW1486562
Name : Sulochana Shesherao Ambhore
Husband's Name: Shesherao Ambhore
House Number : 387
Age : 52 Gender : Female
Photo Available

522 SYF3832755
Name : Uttam Mahadu Ambhore
Father's Name: Mahadu Ambhore
House Number : 388
Age : 55 Gender : Male
Photo Available

523 SYF3832763
Name : Kalavati Uttam Ambhore
Husband's Name: Uttam Ambhore
House Number : 388
Age : 52 Gender : Female
Photo Available

524 BHW1464262
Name : Raoji Ganpati Gavale
Father's Name: Ganpati Gavale
House Number : 389
Age : 84 Gender : Male
Photo Available

525 SYF3832771
Name : Yashodabai Raoji Gavale
Husband's Name: Raoji Gavale
House Number : 389
Age : 82 Gender : Female
Photo Available

526 BHW1464478
Name : Shivaji Raoji Gavale
Father's Name: Raoji Gavale
House Number : 389
Age : 49 Gender : Male
Photo Available

527 BHW1464239
Name : Shakuntala Shivaji Gavale
Husband's Name: Shivaji Gavale
House Number : 389
Age : 46 Gender : Female
Photo Available

528 BHW1464221
Name : Chandrakala Sham Rao Gavale
Husband's Name: Sham Rao Gavale
House Number : 389
Age : 42 Gender : Female
Photo Available

529 BHW1463504
Name : Ramji Khandojee Jhalke
Father's Name: Khandojee Jhalke
House Number : 391
Age : 57 Gender : Male
Photo Available

530 BHW1464338
Name : Laxmi Bai Waman Jhalke
Husband's Name: Waman Jhalke
House Number : 391
Age : 54 Gender : Female
Photo Available

531 BHW1463041
Name : Saraswati Ramji Jhalke
Husband's Name: Ramji Jhalke
House Number : 391
Age : 52 Gender : Female
Photo Available

532 BHW1463751
Name : Shantabai Devidas Ambhare
Husband's Name: Devidas Ambhare
House Number : 396
Age : 42 Gender : Female
Photo Available

533 BHW1463934
Name : Devidas Narayan Ambhore
Father's Name: Narayan Ambhore
House Number : 396
Age : 48 Gender : Male
Photo Available

534 BHW1462993
Name : Janabai Nagorav Abhore
Husband's Name: Nagorav Abhore
House Number : 397
Age : 44 Gender : Female
Photo Available

535 BHW1464452
Name : Waman Nagan Khandojee
Father's Name: Nagan Khandojee
House Number : 672
Age : 60 Gender : Male
Photo Available

536 SYF3832797
Name : Shevantabai Lalji Vakode
Husband's Name: Lalji Vakode
House Number : 672
Age : 77 Gender : Female
Photo Available

537 BHW1463173
Name : Ramji Lalji Vakode
Father's Name: Lalji Vakode
House Number : 672
Age : 54 Gender : Male
Photo Available

538 BHW1463017
Name : Vimalbai Ramji Vakode
Husband's Name: Ramji Vakode
House Number : 672
Age : 52 Gender : Female
Photo Available

539 SYF4607396
Name : shital sandip jadhav
Husband's Name: sandip jadhav
House Number : 35
Age : 24 Gender : Female
Photo Available

540 SYF4686630
Name : Niropa Vivek Rathod
Husband's Name: Vivek Rathod
House Number : 123
Age : 25 Gender : Female
Photo Available

541 SYF4686663
Name : Devidas Bhanu Rathod
Father's Name: Dharma Rathod Rathod
House Number : 143
Age : 55 Gender : Male
Photo Available

542 SYF4687661
Name : Laxmibai Devidas Rathod
Husband's Name: Devidas Rathod
House Number : 146
Age : 50 Gender : Female
Photo Available

543 SYF4687760
Name : Shilpa Raju Jadhav
Husband's Name: Raju Jadhav
House Number : 356
Age : 29 Gender : Female
Photo Available

544 SYF4687778
Name : Sarswati Balu Rathod
Husband's Name: Balu Rathod
House Number : 212
Age : 26 Gender : Female
Photo Available

545 SYF4688057
Name : Sushila Megraj Jadhav
Husband's Name: Megraj Jadhav
House Number : 125
Age : 40 Gender : Female
Photo Available

546 SYF4688065
Name : Premdas Shesherao Rathod
Others: Shesherao Rathod
House Number : 345
Age : 22 Gender : Male
Photo Available

547 SYF4691093
Name : Laxmibai Raju Rathod
Husband's Name: Raju Vittla Rathod
House Number : 12
Age : 47 Gender : Female
Photo Available

548 SYF4691101
Name : Alka Rahul Jadhav
Husband's Name: Rahul Jadhav
House Number : 336
Age : 22 Gender : Female
Photo Available

549 SYF4691119
Name : Varshatai Santosh Pawar
Husband's Name: Santosh Pawar
House Number : 63
Age : 24 Gender : Female
Photo Available

550 SYF4839114
Name : Ambadas Devrao pawar
Father's Name: Devrao baliram Pawar
House Number : 310
Age : 24 Gender : Male
Photo Available

SUMMARY OF ELECTORS

A) NUMBER OF ELECTORS

		Roll Type	Roll Identification	NUMBER OF ELECTORS			
				Male	Female	Third Gender	Total
I	Original	Mother Roll	Draft Electoral Roll prepared under Special Intensive Revision - 2026	287	263	0	550
				287	263	0	550

Issued by Electoral Registration Office