ELECTORAL ROLL 2026 S13 Maharashtra

No. Name and Reservation Status of Assembly Constituency : 84 - HADGAON (GEN)	Part No. : 274
No. Name and Reservation Status of Parliamentary Constituency(ies) in which the Assembly Constituency is located : 15 - HINGOLI (GEN)	

1. Details of Revision

Year of Revision	**2026**
Qualifying Date	**01-10-2026**
Type of revision	**Special Intensive Revision 2026**
Date of Publication	**31-08-2026**

Roll Identification

Draft Electoral Roll prepared under Special Intensive Revision - 2026

2. Details of part and polling area

No. and name of sections in the part

1-Pota Bu , Navi Abadi

Main Town or Village	: POTA BU.
Police Station	: HIMAYATNAGAR
Taluka	: HIMAYATNAGAR
District	: NANDED
Pin code	: 431802

3. Polling Station Details

No. and Name of Polling Station : 274 - Pota Bu **Address of Polling Station :** Z.P.C.P.S, Room No 1 West Side, Pota Bu	**Type of Polling Station (Male/Female/General)**	General
	Number of Auxiliary Polling Stations in this part :	0

4. NUMBER OF ELECTORS

Starting Serial No.	Ending Serial No.	Net Electors			
		Male	Female	Third Gender	Total
1	977	505	471	1	977

Issued by Electoral Registration Office

Nazri Naksha

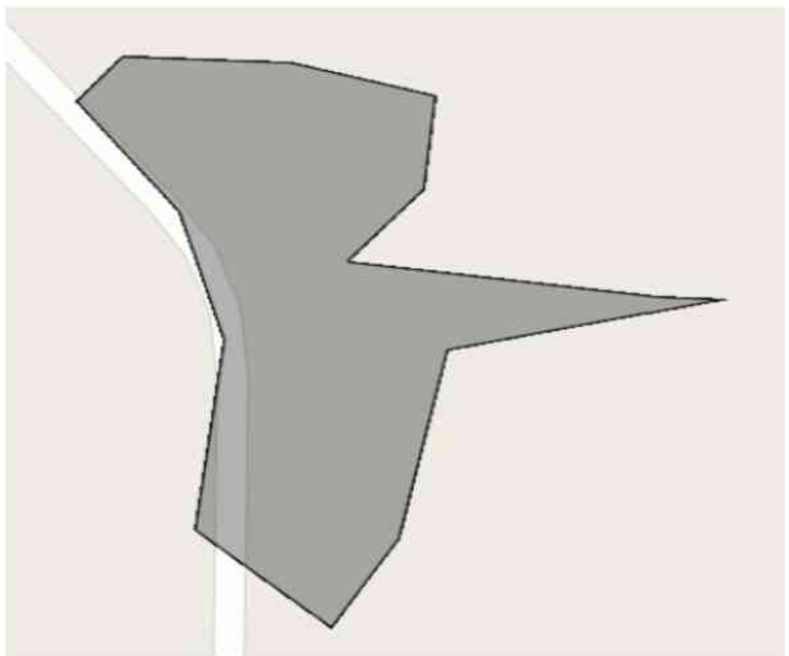

Google Map View

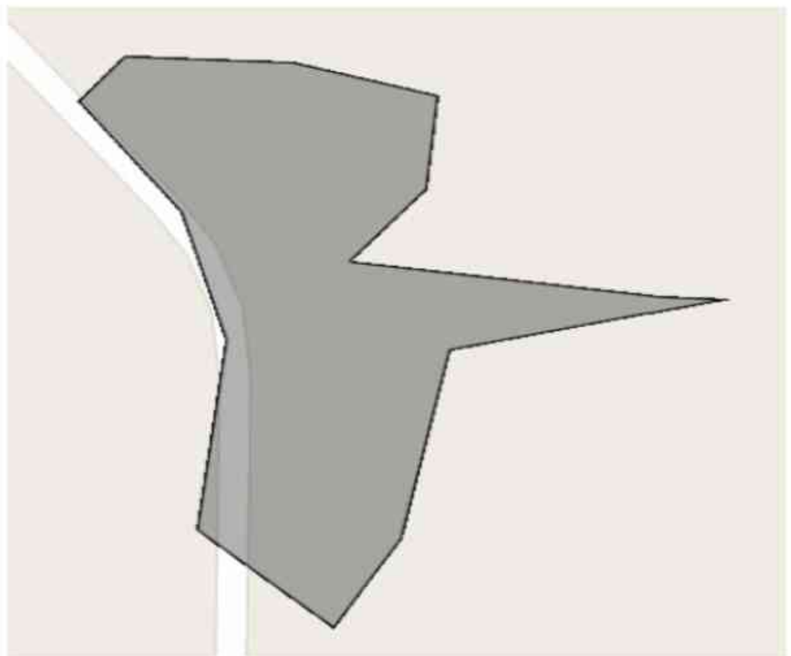

Polling Station Building Front View



Polling Station Front View



Cad View

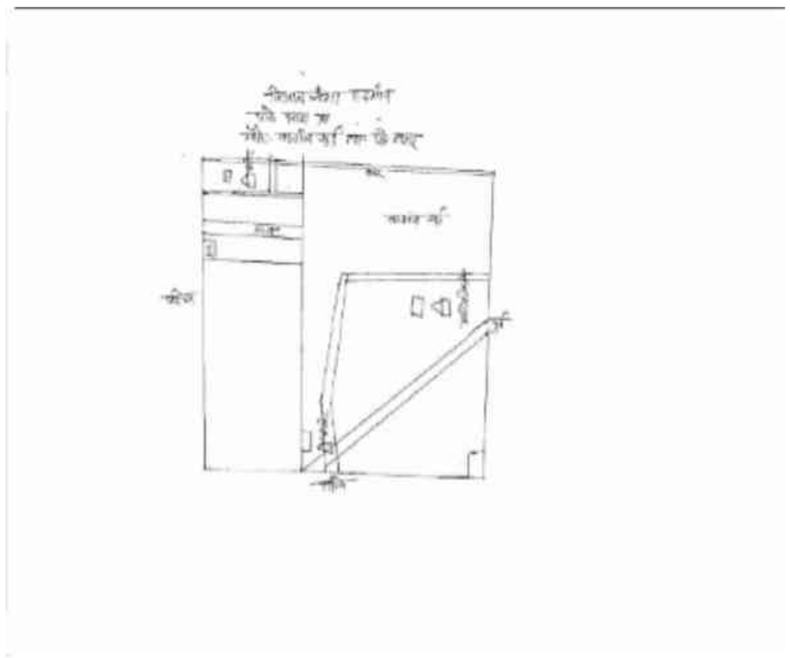

Key MAP View

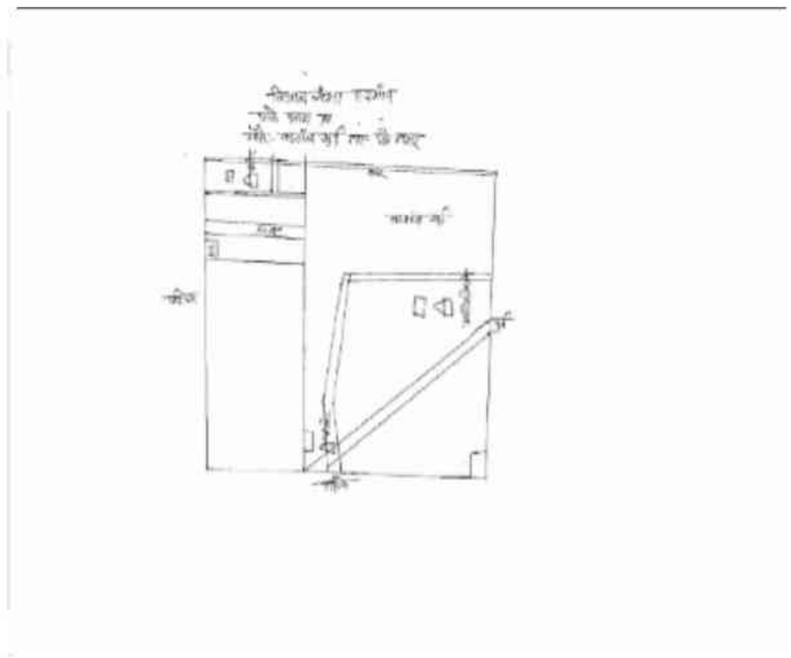

1 SYF3296266
Name : Shaikh Daud
Father's Name: Shaikh Mohiddin
House Number :
Age : 39 Gender : Male
Photo Available

2 SYF3436615
Name : Asalamkhan Pathan
Father's Name: Ahemadkhan Pathan
House Number :
Age : 30 Gender : Male
Photo Available

3 SYF3436631
Name : Shaibas Khan Pathan
Father's Name: Maheraj Khan Pathan
House Number :
Age : 29 Gender : Male
Photo Available

4 SYF3296282
Name : manohar Madhavrao Alewar
Father's Name: Madhavrao Alewar
House Number :
Age : 55 Gender : Male
Photo Available

5 SYF4308284
Name : Nagorao Shamrao Dasarwad
Father's Name: Shamrao Dasarwad
House Number :
Age : 34 Gender : Male
Photo Available

6 SYF3247111
Name : Gajanan Sudhakar Deshkukh
Father's Name: Sudhakar Deshkukh
House Number :
Age : 40 Gender : Male
Photo Available

7 SYF3247194
Name : Satvashila Subhash Dhole
Father's Name: Subhash Dhole
House Number :
Age : 34 Gender : Female
Photo Available

8 SYF3247244
Name : Madhav Nagorao Dhole
Father's Name: Nagorao Dhole
House Number :
Age : 33 Gender : Male
Photo Available

9 SYF3247186
Name : Premala Ramrao Dokhale
Father's Name: Ramrao Dokhale
House Number :
Age : 44 Gender : Female
Photo Available

10 SYF2938868
Name : Baburao Umaji Dokhale
Father's Name: Umaji Dokhale
House Number :
Age : 43 Gender : Male
Photo Available

11 SYF3247178
Name : Mangalbai Narayan Dokhale
Husband's Name: Narayan Dokhale
House Number :
Age : 41 Gender : Female
Photo Available

12 SYF3501681
Name : Santosh Dagdu Dokhale
Father's Name: Dagdu Dokhale
House Number :
Age : 39 Gender : Male
Photo Available

13 SYF3246915
Name : Balaji Bhaurao Dokhale
Father's Name: Bhaurao Dokhale
House Number :
Age : 39 Gender : Male
Photo Available

14 SYF4309779
Name : Tukaram Dagadu Dokhale
Father's Name: Dagadu Dokhale
House Number :
Age : 36 Gender : Male
Photo Available

15 SYF4309944
Name : Vasant Dagadu Dokhale
Father's Name: Dagadu Dokhale
House Number :
Age : 35 Gender : Male
Photo Available

16 SYF3501707
Name : Sambhaji Shamrao Dokhale
Father's Name: Shamrao Dokhale
House Number :
Age : 33 Gender : Male
Photo Available

17 SYF3501731
Name : Kavita Savita Dokhale
Husband's Name: Savita Dokhale
House Number :
Age : 33 Gender : Female
Photo Available

18 SYF3247038
Name : Nagorao Sheshrao Dokhale
Father's Name: Sheshrao Dokhale
House Number :
Age : 31 Gender : Male
Photo Available

19 SYF4309480
Name : Warsha Nagorao Dokhale
Husband's Name: Nagorao Dokhale
House Number :
Age : 27 Gender : Female
Photo Available

20 SYF3296308
Name : Rajendra Chandrao Dudhade
Father's Name: Chandrao Dudhade
House Number :
Age : 34 Gender : Male
Photo Available

21 SYF3247236
Name : Maroti Datta Gabade
Father's Name: Datta Gabade
House Number :
Age : 33 Gender : Male
Photo Available

22 SYF3246949
Name : Praphu Dattatray Gachche
Father's Name: Dattatray Gachche
House Number :
Age : 36 Gender : Male
Photo Available

23 SYF4307831
Name : Rameshwar Dagadu Gobade
Father's Name: Dagadu Gobade
House Number :
Age : 37 Gender : Male
Photo Available

24 SYF4308615
Name : Sagarbai Balaji Gobade
Husband's Name: Balaji Gobade
House Number :
Age : 35 Gender : Female
Photo Available

25 SYF3246964
Name : Balaji Narayanrao Jadhav
Father's Name: Narayanrao Jadhav
House Number :
Age : 57 Gender : Male
Photo Available

26 SYF3246972
Name : Sushila Balaji Jadhav
Husband's Name: Balaji Jadhav
House Number :
Age : 53 Gender : Female
Photo Available

27 SYF3296381
Name : Rekhatai Datta Jadhav
Husband's Name: Datta Jadhav
House Number :
Age : 32 Gender : Female
Photo Available

28 SYF3246956
Name : Ashok Pochiram Jalpate
Father's Name: Pochiram Jalpate
House Number :
Age : 35 Gender : Male
Photo Available

29 SYF3246998
Name : Gunaji Reshmaji Jalpate
Father's Name: Reshmaji Jalpate
House Number :
Age : 32 Gender : Male
Photo Available

30 SYF3247285
Name : Maroti Shreehari Khadke
Father's Name: Shreehari Khadke
House Number :
Age : 33 Gender : Male
Photo Available

31 SYF3247095 Name : Supriya Maroti Khadke Husband's Name: Maroti Khadke House Number : Age : 32 Gender : Female Photo Available	32 SYF3296415 Name : Asha Shivaji Kharode Husband's Name: Shivaji Kharode House Number : Age : 40 Gender : Female Photo Available	33 SYF3247202 Name : Nitin Dagdu Kharwade Father's Name: Dagdu Kharwade House Number : Age : 31 Gender : Male Photo Available
34 SYF3246931 Name : Hematai Mangesh Lokhande Husband's Name: Mangesh Lokhande House Number : Age : 34 Gender : Female Photo Available	35 SYF2755825 Name : sadhana sainath mane Husband's Name: sainath mane House Number : Age : 41 Gender : Female Photo Available	36 SYF3247160 Name : Vaishali Arvind Mane Husband's Name: Arvind Mane House Number : Age : 37 Gender : Female Photo Available
37 SYF3247228 Name : Jayshri Arvind Mane Husband's Name: Arvind Mane House Number : Age : 36 Gender : Female Photo Available	38 SYF2755841 Name : tukaram suryakant mane Father's Name: suryakant mane House Number : Age : 34 Gender : Male Photo Available	39 SYF3247061 Name : Gajanan Pandit Mane Father's Name: Pandhari Mane House Number : Age : 33 Gender : Male Photo Available
40 SYF3247210 Name : Asha Tukaram Mane Husband's Name: Tukaram Mane House Number : Age : 33 Gender : Female Photo Available	41 SYF3246832 Name : Sunanda Nagorao Methewad Husband's Name: Nagorao Methewad House Number : Age : 41 Gender : Female Photo Available	42 SYF3246857 Name : Dnyaneshwar Nagorao Methrwad Father's Name: Nagorao Methrwad House Number : Age : 30 Gender : Male Photo Available
43 SYF3501640 Name : Rambhau Amruta Mirashe Father's Name: Amruta Mirashe House Number : Age : 65 Gender : Male Photo Available	44 SYF3501723 Name : Anusaya Rambhau Mirashe Husband's Name: Rambhau Mirashe House Number : Age : 60 Gender : Female Photo Available	45 SYF3246873 Name : Laxmibai Janardhan Mirashe Husband's Name: Janardhan Mirashe House Number : Age : 50 Gender : Female Photo Available
46 SYF3246899 Name : Balaji Digambar Mirashe Father's Name: Digambar Mirashe House Number : Age : 36 Gender : Male Photo Available	47 SYF3246865 Name : Vitthal Datta Mirashe Father's Name: Datta Mirashe House Number : Age : 33 Gender : Male Photo Available	48 SYF3501665 Name : Ganesh Rambhau Mirashe Father's Name: Rambhau Mirashe House Number : Age : 29 Gender : Male Photo Available
49 SYF2598381 Name : Pirajee Lingoji Nukulavad Father's Name: Lingoji Nukulavad House Number : Age : 54 Gender : Male Photo Available	50 SYF2598399 Name : Laxmi Bai Pirajee Nukulavad Husband's Name: Pirajee Nukulavad House Number : Age : 41 Gender : Female Photo Available	51 SYF3247129 Name : Maroti Madhavrao Panchal Father's Name: Madhavrao Panchal House Number : Age : 56 Gender : Male Photo Available
52 SYF3247053 Name : Ravikumar Maroti Panchal Father's Name: Maroti Panchal House Number : Age : 31 Gender : Male Photo Available	53 SYF2598415 Name : Chandrakant Gangadhar Pinnalavar Father's Name: Gangadhar Pinnalavar House Number : Age : 37 Gender : Male Photo Available	54 SYF2598407 Name : VISHAL PINNALVAR Father's Name: GANGADHARRAO PINNALVAR House Number : Age : 37 Gender : Male Photo Available
55 SYF3247251 Name : AJiankya Bhagwan Pinnalwar Father's Name: Bhagwan Pinnalwar House Number : Age : 32 Gender : Male Photo Available	56 SYF2939346 Name : Shobha Gajanan Potare Husband's Name: Gajanan Potare House Number : Age : 52 Gender : Female Photo Available	57 SYF3246824 Name : Maroti Kishanrao Rane Father's Name: Kishanrao Rane House Number : Age : 31 Gender : Male Photo Available
58 SYF3296274 Name : Sumaiya Daud Shaikh Husband's Name: Daud Shaikh House Number : Age : 40 Gender : Female Photo Available	59 SYF3296290 Name : SHAESTA PARVIN SAJID SHAIKH Husband's Name: Shaikh Sajid Gulab House Number : Age : 37 Gender : Female Photo Available	60 SYF2939304 Name : Gulab Fakir Shaikh Father's Name: Fakir Shaikh House Number : Age : 31 Gender : Male Photo Available

61 SYF3247277
Name : Akbar Ambir Shaikh
Father's Name: Ambir Shaikh
House Number :
Age : 31 Gender : Male
Photo Available

62 SYF3296456
Name : Ramdas Uttam Shinde
Father's Name: Uttam Shinde
House Number :
Age : 31 Gender : Male
Photo Available

63 SYF3296431
Name : Dilip Madhav Shinde
Father's Name: Madhav Shinde
House Number :
Age : 31 Gender : Male
Photo Available

64 SYF3296514
Name : Vijaymala Ankush Suryavanshi
Husband's Name: Ankush Suryavanshi
House Number :
Age : 39 Gender : Female
Photo Available

65 SYF3247269
Name : Satva Ganpat Tokalwar
Father's Name: Ganpat Tokalwar
House Number :
Age : 31 Gender : Male
Photo Available

66 SYF3296373
Name : Tukaram Parmeshwar Walegaokar
Father's Name: Parmeshwar Walegaokar
House Number :
Age : 37 Gender : Male
Photo Available

67 SYF3296365
Name : Gurga Tukaram Walegaokar
Father's Name: Tukaram Walegaokar
House Number :
Age : 31 Gender : Female
Photo Available

68 SYF3296506
Name : Saurabh Shrikrishnavilas Wattamwar
Father's Name: Shrikrishnavilas Wattamwar
House Number :
Age : 33 Gender : Male
Photo Available

69 SYF3602034
Name : SHIVANI SHRIKRISHNAVILAS WATTAMWAR
Father's Name: SHRIKRISHNAVILAS DATTATRAY WATTAMWAR
House Number :
Age : 27 Gender : Female
Photo Available

70 SYF4504817
Name : JAIDEV MAKODE
Father's Name: MUKTABAI MAKODE
House Number : -
Age : 21 Gender : Male
Photo Available

71 SYF4537072
Name : Yogesh Maroti Mane
Father's Name: Maroti Mane
House Number : 0
Age : 25 Gender : Male
Photo Available

72 SYF3786449
Name : Apurva Gajanan Mane
Others: UMESH GANGADHAR MAKODE
House Number : 1
Age : 28 Gender : Female
Photo Available

73 SYF4401659
Name : Shobha Jadhav
Father's Name: Digambar Jadhav
House Number : 1
Age : 50 Gender : Female
Photo Available

74 SYF3626033
Name : Balaji Pandurang Khadke
Father's Name: Pandurang Khadke
House Number : 2
Age : 30 Gender : Male
Photo Available

75 BHW1477314
Name : Najema Se. Yunus Se
Husband's Name: Se. Yunus Se
House Number : 5
Age : 43 Gender : Female
Photo Available

76 BHW1475466
Name : Asefabee Javed Shaikh
Husband's Name: Se. Zaved Se Asefa
House Number : 5
Age : 41 Gender : Female
Photo Available

77 BHW1475086
Name : Shaikh Javed Shaikh Gulab
Father's Name: Shaikh Gulab
House Number : 5
Age : 42 Gender : Male
Photo Available

78 SYF3837309
Name : Makabulbi Gulabashaha Shaikh
Husband's Name: Gulabashaha Shaikh
House Number : 5
Age : 74 Gender : Female
Photo Available

79 BHW1475185
Name : Shabbir Gulabsha Shaikh
Father's Name: Gulabsha Shaikh
House Number : 5
Age : 48 Gender : Male
Photo Available

80 SYF3562485
Name : Farjana Shabbir Shaikh
Husband's Name: Shabbir Shaikh
House Number : 5
Age : 37 Gender : Female
Photo Available

81 SYF3625670
Name : Mujaheed Shabbir Shaikh
Father's Name: Shabbir Shaikh
House Number : 5
Age : 31 Gender : Male
Photo Available

82 SYF3790730
Name : Rina Begam Shaikh Mujahid
Husband's Name: Shabir Shaikh
House Number : 5
Age : 29 Gender : Female
Photo Available

83 SYF3837317
Name : Bapoorao Tukaram Mane
Father's Name: Tukaram Mane
House Number : 8
Age : 63 Gender : Male
Photo Available

84 SYF3837325
Name : Godavaribai Bapurao Mane
Husband's Name: Bapurao Mane
House Number : 8
Age : 58 Gender : Female
Photo Available

85 SYF1822006
Name : Govind Khandujee Avachar
Father's Name: Khandujee Avachar
House Number : 9
Age : 37 Gender : Male
Photo Available

86 SYF1822022
Name : Rekha Govind Avachar
Husband's Name: Govind Avachar
House Number : 9
Age : 36 Gender : Female
Photo Available

87 SYF3837341
Name : Baburao Ramchandra Butale
Father's Name: Ramchandra Butale
House Number : 9
Age : 68 Gender : Male
Photo Available

88 SYF1821982
Name : Sunita Balasaheb Butale
Husband's Name: Balasaheb Butale
House Number : 9
Age : 62 Gender : Female
Photo Available

89 SYF3837358
Name : Govind Rao Baburao Butale
Father's Name: Baburao Butale
House Number : 9
Age : 48 Gender : Male
Photo Available

90 BHW1478486
Name : Maroti Baburao Butale
Father's Name: Baburao Butale
House Number : 9
Age : 42 Gender : Male
Photo Available

91 SYF1822014
Name : Sandeep Ashokarao Butale
Father's Name: Ashokarao Butale
House Number : 9
Age : 38 Gender : Male
Photo Available

92 SYF1821990
Name : Usha Sandiparav Butale
Husband's Name: Sandiparav Butale
House Number : 9
Age : 36 Gender : Female
Photo Available

93 SYF4527776
Name : Priyanka Maroti Butle
Husband's Name: Maroti Butle
House Number : 9
Age : 35 Gender : Female
Photo Available

94 SYF4526703
Name : Aniket Maroti Butle
Father's Name: Maroti Butle
House Number : 9
Age : 21 Gender : Male
Photo Available

95 SYF3394541
Name : Meena Pundlik Mane
Husband's Name: Pundlik Mane
House Number : 9
Age : 39 Gender : Female
Photo Available

96 SYF4374435
Name : Vijaymala Gobade
Husband's Name: Bhaurau Gobade
House Number : 10
Age : 40 Gender : Female
Photo Available

97 SYF3837366
Name : Aalam Arabi Shefi Ahmed Shaikh
Husband's Name: Shefi Ahmed Shaikh
House Number : 10
Age : 68 Gender : Female
Photo Available

98 SYF1520642
Name : Rais Ahmed Shafi Shaikh
Father's Name: Shafi Shaikh
House Number : 10
Age : 48 Gender : Male
Photo Available

99 SYF3086733
Name : Praveen Neesha Begum Rais Shaikh
Husband's Name: Neesha Begum Rais Shaikh
House Number : 10
Age : 47 Gender : Female
Photo Available

100 SYF4527784
Name : Saniya Irshad Shaikh
Father's Name: Irshad Shaikh
House Number : 10
Age : 23 Gender : Female
Photo Available

101 BHW1490820
Name : Nasrin Shaikh Shaikh Irshad
Husband's Name: Se. Irshad
House Number : 10
Age : 42 Gender : Female
Photo Available

102 SYF3086725
Name : Irshad Shafi Shaikh
Father's Name: Shafiaihamad Shaikh
House Number : 10
Age : 49 Gender : Male
Photo Available

103 SYF4374401
Name : Sonali Wanole
Husband's Name: Shivaji Wanole
House Number : 10
Age : 28 Gender : Female
Photo Available

104 SYF4374450
Name : Dilip Gobade
Father's Name: Laxman Gobade
House Number : 11
Age : 27 Gender : Male
Photo Available

105 SYF4374757
Name : Manisha Mane
Husband's Name: Dattatrey Mane
House Number : 11
Age : 28 Gender : Female
Photo Available

106 SYF4384608
Name : Manoj Potare
Father's Name: Gajanan Potare
House Number : 11
Age : 30 Gender : Male
Photo Available

107 SYF3837374
Name : Wahida Se. Muneer Shaikh
Husband's Name: Se. Muneer Shaikh
House Number : 11
Age : 63 Gender : Female
Photo Available

108 SYF4374385
Name : Vishvajit Kadam
Father's Name: Ganesh Kadam
House Number : 12
Age : 24 Gender : Male
Photo Available

109 SYF1822030
Name : Tukaram Bapoorao Mane
Father's Name: Bapoorao Mane
House Number : 12
Age : 36 Gender : Male
Photo Available

110 SYF3394285
Name : Jyoti Tukaram Mane
Husband's Name: Tukaram Mane
House Number : 12
Age : 35 Gender : Female
Photo Available

111 SYF4374682
Name : Shivani Mane
Husband's Name: Shubham Mane
House Number : 12
Age : 27 Gender : Female
Photo Available

112 SYF4374344
Name : Maya Mane
Husband's Name: Satavaji Mane
House Number : 12
Age : 24 Gender : Female
Photo Available

113 SYF4374419
Name : Pragati Walegavkar
Husband's Name: Govind Walegavkar
House Number : 12
Age : 25 Gender : Female
Photo Available

114 SYF2688554
Name : Kavita Santosh Mane
Husband's Name: Santosh Mane
House Number : 13
Age : 36 Gender : Female
Photo Available

115 SYF3698289
Name : Gajanan Ganpat Suroshe
Father's Name: Ganpat Suroshe
House Number : 13
Age : 31 Gender : Male
Photo Available

116 SYF1822048
Name : Vitthal Aamedwar
Father's Name: Amedavar
House Number : 14
Age : 37 Gender : Male
Photo Available

117 BHW1475722
Name : Balaji Poshati Amadavad
Father's Name: Poshati Amadavad
House Number : 14
Age : 39 Gender : Male
Photo Available

118 BHW1475912
Name : Var Mar Oti Poshett I Amed
Father's Name: Var Poshett I Amed
House Number : 14
Age : 42 Gender : Male
Photo Available

119 SYF1822055
Name : Renuka Maroti Amedavar
Husband's Name: Maroti Amedavar
House Number : 14
Age : 39 Gender : Female
Photo Available

120 SYF1822063
Name : Kalpana Balaji Amedavar
Husband's Name: Balaji Amedavar
House Number : 14
Age : 36 Gender : Female
Photo Available

121 SYF3625399
Name : Padminibai Vithhal Amedawar
Husband's Name: Vithhal Amedawar
House Number : 14
Age : 29 Gender : Female
Photo Available

122 SYF1822071
Name : Vyankati Poshati Manamalavad
Father's Name: Poshati Manamalavad
House Number : 15
Age : 49 Gender : Male
Photo Available

123 SYF1571819
Name : Ganga Vyankat Manamalavad
Father's Name: Vyankat Manamalavad
House Number : 15
Age : 44 Gender : Female
Photo Available

124 SYF4374518
Name : Nilkanth Mane
Father's Name: Prakasha Mane
House Number : 15
Age : 27 Gender : Male
Photo Available

125 SYF3793171
Name : Shivrani Rane
Husband's Name: Maroti Rane
House Number : 15
Age : 27 Gender : Female
Photo Available

126 SYF4374328
Name : Geeta Nilkanth Padwale
Husband's Name: Nilkanth Padwale
House Number : 16
Age : 30 Gender : Female
Photo Available

127 BHW1479492
Name : Ashok Tukaram Mane
Father's Name: Tukaram Mane
House Number : 17
Age : 63 Gender : Male
Photo Available

128 BHW1476563
Name : Shobhabai Ashokarao Mane
Husband's Name: Ashokarao Mane
House Number : 17
Age : 58 Gender : Female
Photo Available

129 BHW1477181
Name : Mathurabai Pandit Mane
Husband's Name: Pandit Mane
House Number : 17
Age : 53 Gender : Female
Photo Available

130 SYF3698024
Name : Balaji Ashok Mane
Father's Name: Ashok Mane
House Number : 17
Age : 29 Gender : Male
Photo Available

131 SYF3837515
Name : Govind Rao Dattarav Makode
Father's Name: Dattarav Makode
House Number : 18
Age : 83 Gender : Male
Photo Available

132 SYF3837549
Name : Muktabai Gangadhar Makode
Husband's Name: Gangadhar Makode
House Number : 18
Age : 48 Gender : Female
Photo Available

133 BHW1478130
Name : Balaji Govind Rao Makode
Father's Name: Govind Rao Makode
House Number : 18
Age : 48 Gender : Male
Photo Available

134 SYF3837556
Name : Pandurang Govind Rao Makode
Father's Name: Govind Rao Makode
House Number : 18
Age : 46 Gender : Male
Photo Available

135 SYF3793155
Name : Narayan Makode
Father's Name: Govindrao Makode
House Number : 18
Age : 48 Gender : Male
Photo Available

136 SYF3793502
Name : Rekhabai Makode
Husband's Name: Pandurang Makode
House Number : 18
Age : 46 Gender : Female
Photo Available

137 SYF3086741
Name : Parmeshwar rao Govind Makode
Father's Name: Govind Makode
House Number : 18
Age : 43 Gender : Male
Photo Available

138 BHW1476647
Name : Surekha Balaji Makode
Husband's Name: Balaji Makode
House Number : 18
Age : 42 Gender : Female
Photo Available

139 SYF1561372
Name : Prakash Govind Makode
Father's Name: Govind Makode
House Number : 18
Age : 39 Gender : Male
Photo Available

140 SYF3793163
Name : Nirmala Makode
Husband's Name: Narayan Makode
House Number : 18
Age : 37 Gender : Female
Photo Available

141 SYF2938793
Name : Mahananda Parmeshwar Makode
Husband's Name: Parmeshwar Makode
House Number : 18
Age : 34 Gender : Female
Photo Available

142 SYF4412870
Name : Pallavi Prakash Makode
Husband's Name: Prakash Makode
House Number : 18
Age : 32 Gender : Female
Photo Available

143 SYF3325529
Name : Umesh Gangadhar Makode
Father's Name: Gangadhar Makode
House Number : 18
Age : 30 Gender : Male
Photo Available

144 SYF3793676
Name : Surekha Pinnalwar
Husband's Name: Parmeshwar Pinnalwar
House Number : 18
Age : 53 Gender : Female
Photo Available

145 SYF3698073
Name : Santosh Madhav Shinde
Father's Name: Madhav Shinde
House Number : 18
Age : 40 Gender : Male
Photo Available

146 SYF3793528
Name : Sarswati Butle
Husband's Name: Datta Butle
House Number : 19
Age : 35 Gender : Female
Photo Available

147 SYF3589611
Name : Yadav Nagorao Ghumnar
Father's Name: Nagorao Ghumnar
House Number : 19
Age : 29 Gender : Male
Photo Available

148 SYF2688539
Name : Santosh Vitthal Mane
Father's Name: Vitthal Mane
House Number : 19
Age : 40 Gender : Male
Photo Available

149 SYF4374427
Name : Ratnamala Mirashe
Husband's Name: Dnyaneshwar Mirashe
House Number : 19
Age : 25 Gender : Female
Photo Available

150 SYF2938801
Name : Dnyaneshwar Laxman Khupase
Father's Name: Laxman Khupase
House Number : 20
Age : 35 Gender : Male
Photo Available

151 SYF3698214
Name : Manjusha Namdev Khupase
Father's Name: Namdev Khupase
House Number : 20
Age : 30 Gender : Female
Photo Available

152 SYF3837580
Name : Kalavatibai Laxman Khupse
Husband's Name: Laxman Khupse
House Number : 20
Age : 59 Gender : Female
Photo Available

153 SYF1822097
Name : Tukaram Laxman Khupse
Father's Name: Laxman Khupse
House Number : 20
Age : 35 Gender : Male
Photo Available

154 SYF4374690
Name : Ganpati Mane
Father's Name: Akash Mane
House Number : 20
Age : 25 Gender : Male
Photo Available

155 SYF3697885
Name : Shubhangi Chandrakant Pinnalwar
Husband's Name: Chandrakant Pinnalwar
House Number : 20
Age : 28 Gender : Female
Photo Available

156 SYF2938819
Name : Sakharam Madhav Khupase
Father's Name: Madhav Khupase
House Number : 21
Age : 35 Gender : Male
Photo Available

157 SYF3790797
Name : Balaji Khupase
Father's Name: Madhav Khupase
House Number : 21
Age : 26 Gender : Male
Photo Available

158 SYF3837606
Name : Sita Bai Madhav Khupse
Husband's Name: Madhav Khupse
House Number : 21
Age : 48 Gender : Female
Photo Available

159 SYF2938827
Name : Raosaheb Rama Khupase
Father's Name: Rama Khupase
House Number : 22
Age : 35 Gender : Male
Photo Available

160 SYF2939478
Name : Laxmibai Raosaheb Khupase
Husband's Name: Raosaheb Khupase
House Number : 22
Age : 35 Gender : Female
Photo Available

161 SYF3837622
Name : Kamalbai Rama Khupse
Husband's Name: Rama Khupse
House Number : 22
Age : 68 Gender : Female
Photo Available

162 BHW1475896
Name : Shankar Rama Khupse
Father's Name: Rama Khupse
House Number : 22
Age : 49 Gender : Male
Photo Available

163 SYF1521509
Name : Seema Shankar Khupse
Husband's Name: Shankar Khupse
House Number : 22
Age : 38 Gender : Female
Photo Available

164 SYF1822105
Name : Chandrao Sudam Khupse
Father's Name: Sudam Khupse
House Number : 22
Age : 36 Gender : Male
Photo Available

165 SYF4401816
Name : Swapnil Mane
Father's Name: Bhaskarrao Mane
House Number : 22
Age : 24 Gender : Male
Photo Available

166 SYF3837630
Name : Sakhubai Maroti Khupse
Husband's Name: Maroti Khupse
House Number : 23
Age : 65 Gender : Female
Photo Available

167 SYF4374724
Name : samina gulab shaikh
Husband's Name: Gulam Shaikh
House Number : 23
Age : 33 Gender : Female
Photo Available

168 BHW0703926
Name : Mohan Ladabaji Waghmare
Father's Name: Ladabaji Waghmare
House Number : 23
Age : 53 Gender : Male
Photo Available

169 SYF4374799
Name : Anusaya Amale
Husband's Name: Devidas Amale
House Number : 25
Age : 33 Gender : Female
Photo Available

170 SYF3837648
Name : Shantabai Khandu Jadhav
Husband's Name: Khandu Jadhav
House Number : 25
Age : 91 Gender : Female
Photo Available

171 SYF3837655
Name : Vitthal Khandu Jadhav
Father's Name: Khandu Jadhav
House Number : 25
Age : 58 Gender : Male
Photo Available

172 SYF3837671
Name : Ganesh Khandu Jadhav
Father's Name: Khandu Jadhav
House Number : 25
Age : 56 Gender : Male
Photo Available

173 SYF3837689
Name : Gangabai Ganesh Jadhav
Husband's Name: Ganesh Jadhav
House Number : 25
Age : 53 Gender : Female
Photo Available

174 SYF3837663
Name : Laxmi Bai Vitthal Jadhav
Husband's Name: Vitthal Jadhav
House Number : 25
Age : 53 Gender : Female
Photo Available

175 BHW1496066
Name : Data Vitththal Rao Jadhav
Father's Name: Vitththal Rao Jadhav
House Number : 25
Age : 40 Gender : Male
Photo Available

176 SYF3296399
Name : Sonutai Anil Jadhav
Husband's Name: Anil Jadhav
House Number : 25
Age : 31 Gender : Female
Photo Available

177 SYF3837697
Name : Sambhaji Maneji Dokhale
Father's Name: Maneji Dokhale
House Number : 26
Age : 73 Gender : Male
Photo Available

178 SYF3837713
Name : Ratnamalabai Sambhaj Dokhale
Husband's Name: Ratnamalabai Dokhale
House Number : 26
Age : 68 Gender : Female
Photo Available

179 BHW1491083
Name : Madhav Sambhaji Dokhale
Father's Name: Sambhaji Dokhale
House Number : 26
Age : 47 Gender : Male
Photo Available

180 BHW1491075
Name : Surekhabai Madhav Dokhale
Husband's Name: Madhav Dokhale
House Number : 26
Age : 43 Gender : Female
Photo Available

181 SYF2938835
Name : Gajanan Sambhaji Dokhale
Father's Name: Sambhaji Dokhale
House Number : 26
Age : 35 Gender : Male
Photo Available

182 SYF2938843
Name : Vitthal Sambhaji Dokhale
Father's Name: Sambhaji Dokhale
House Number : 26
Age : 35 Gender : Male
Photo Available

183 SYF2939486
Name : Vandana Vitthal Dokhale
Husband's Name: Vitthal Dokhale
House Number : 26
Age : 32 Gender : Female
Photo Available

184 SYF3698149
Name : Parvati Madhav Dokhale
Husband's Name: Madhav Dokhale
House Number : 26
Age : 31 Gender : Female
Photo Available

185 SYF4374443
Name : Shankar Gobade
Father's Name: Laxman Gobade
House Number : 26
Age : 30 Gender : Male
Photo Available

186 SYF3697976
Name : Ankita Shrinivas Jadhav
Husband's Name: Shrinivas Jadhav
House Number : 26
Age : 27 Gender : Female
Photo Available

187 SYF3751054
Name : Latabai Mendewad
Husband's Name: Sopan Mendewad
House Number : 26
Age : 26 Gender : Female
Photo Available

188 SYF2939551
Name : Renukabai Dinkar Dokhale
Husband's Name: Dinkar Dokhale
House Number : 27
Age : 46 Gender : Female
Photo Available

189 SYF1822113
Name : Sandeep Dinkar Dokhale
Father's Name: Dinkar Dokhale
House Number : 27
Age : 36 Gender : Male
Photo Available

190 SYF2939460
Name : Latabai Sandip Dokhale
Husband's Name: Sandip Dokhale
House Number : 27
Age : 30 Gender : Female
Photo Available

191 SYF3838844
Name : Subhdrabai Ganpati Dokhale
Husband's Name: Ganpati Dokhale
House Number : 29
Age : 63 Gender : Female
Photo Available

192 SYF2939536
Name : Laxmibai Digambar Dokhale
Husband's Name: Digambar Dokhale
House Number : 29
Age : 50 Gender : Female
Photo Available

193 BHW1477447
Name : Ananda Ganpati Dokhale
Father's Name: Ganpati Dokhale
House Number : 29
Age : 49 Gender : Male
Photo Available

194 BHW1477207
Name : Anusaya Sheshrao Dokhale
Husband's Name: Sheshrao Dokhale
House Number : 29
Age : 46 Gender : Female
Photo Available

195 BHW1477199
Name : Meena Ananda Dokhale
Husband's Name: Ananda Dokhale
House Number : 29
Age : 44 Gender : Female
Photo Available

196 SYF2939528
Name : Arvind Digambar Dokhale
Father's Name: Digambar Dokhale
House Number : 29
Age : 30 Gender : Male
Photo Available

197 SYF4374740
Name : Gaytri Jadhav
Father's Name: Diliprao Jadhav
House Number : 29
Age : 25 Gender : Female
Photo Available

198 SYF3839057
Name : Laxmi Bai Namdev Gayke
Husband's Name: Namdev Gayke
House Number : 30
Age : 73 Gender : Female
Photo Available

199 SYF3839065
Name : Balaji Namdev Gayke
Father's Name: Namdev Gayke
House Number : 30
Age : 50 Gender : Male
Photo Available

200 SYF3246790
Name : Mira Gajanan Deshkukh
Father's Name: Gajanan Deshkukh
House Number : 32
Age : 36 Gender : Female
Photo Available

201 SYF1571678
Name : Manjusha Dilip Pavle
Husband's Name: Dilip Pavle
House Number : 32
Age : 39 Gender : Female
Photo Available

202 SYF3838950
Name : Anjanabai Laxman Suryavanshi
Husband's Name: Laxman Suryavanshi
House Number : 32
Age : 53 Gender : Female
Photo Available

203 SYF2938850
Name : Tanaji Laxman Suryawanshi
Father's Name: Laxman Suryawanshi
House Number : 32
Age : 37 Gender : Male
Photo Available

204 SYF2939445
Name : Daivashala Tanaji Suryawanshi
Husband's Name: Tanaji Suryawanshi
House Number : 32
Age : 31 Gender : Female
Photo Available

205 SYF1822121
Name : Meenabai Gajanan Valeganvakar
Husband's Name: Gajanan Valeganvakar
House Number : 32
Age : 40 Gender : Female
Photo Available

206 SYF3838893
Name : Parmeshvar Basaji Valegavakar
Father's Name: Basaji Valegavakar
House Number : 32
Age : 60 Gender : Male
Photo Available

207 SYF3838901
Name : Sunandabai Bhagwan Valegavakar
Husband's Name: Bhagwan Valegavakar
House Number : 32
Age : 53 Gender : Female
Photo Available

208 SYF3838919
Name : Ram Rao Basaji Valegavakar
Father's Name: Basaji Valegavakar
House Number : 32
Age : 53 Gender : Male
Photo Available

209 SYF3838935
Name : Laxmi Bai Parmeshwar Valegavakar
Husband's Name: Parmeshwar Valegavakar
House Number : 32
Age : 53 Gender : Female
Photo Available

210 SYF3838927
Name : Sushilabai Ram Rao Valegavakar
Husband's Name: Ram Rao Valegavakar
House Number : 32
Age : 48 Gender : Female
Photo Available

211 BHW1477413
Name : Gajanan Basaji Valegavakar
Father's Name: Basaji Valegavakar
House Number : 32
Age : 45 Gender : Male
Photo Available

212 SYF3247145
Name : Laxmibai Santosh Walegaokar
Husband's Name: Santosh Walegaokar
House Number : 32
Age : 39 Gender : Female
Photo Available

213 SYF3296316
Name : Raju Bhagvan Walegaokar
Father's Name: Bhagvan Walegaokar
House Number : 32
Age : 35 Gender : Male
Photo Available

214 SYF3296324
Name : Chhaya Raju Walegaokar
Husband's Name: Raju Walegaokar
House Number : 32
Age : 32 Gender : Female
Photo Available

215 SYF3790755
Name : Sainath Walegaonkar
Father's Name: Bhagawanrao Walegaonkar
House Number : 32
Age : 42 Gender : Male
Photo Available

216 SYF3790748
Name : Lata Walegaonkar
Husband's Name: Sainath Walegaonkar
House Number : 32
Age : 35 Gender : Female
Photo Available

217 SYF3793312
Name : Govind Walegavkar
Father's Name: Ramrao Walegavkar
House Number : 32
Age : 30 Gender : Male
Photo Available

218 SYF3793304
Name : Shivaji Walegavkar
Father's Name: Ramrao Walegavkar
House Number : 32
Age : 29 Gender : Male
Photo Available

219 SYF1520675
Name : Renukabai Ramchandra Dokhale
Husband's Name: Ramchandra Dokhale
House Number : 33
Age : 39 Gender : Female
Photo Available

220 SYF3838984
Name : Madhav Rao Bayaji Valeganvakar
Father's Name: Bayaji Valeganvakar
House Number : 33
Age : 78 Gender : Male
Photo Available

221 SYF3839008
Name : Uttam Madhav Rao Valeganvakar
Father's Name: Madhav Rao Valeganvakar
House Number : 33
Age : 53 Gender : Male
Photo Available

222 SYF3839016
Name : Kantabai Uttam Valeganvakar
Husband's Name: Uttam Valeganvakar
House Number : 33
Age : 48 Gender : Female
Photo Available

223 SYF3839024
Name : Seetaram Nagoba Pavle
Father's Name: Nagoba Pavle
House Number : 34
Age : 68 Gender : Male
Photo Available

224 SYF3839032
Name : Gayabai Seetaram Pavle
Husband's Name: Seetaram Pavle
House Number : 34
Age : 63 Gender : Female
Photo Available

225 SYF3839040
Name : Devidas Seetaram Pavle
Father's Name: Seetaram Pavle
House Number : 34
Age : 46 Gender : Male
Photo Available

226 BHW1479161
Name : Santosh Seetaram Pavle
Father's Name: Santosh Seetaram Pavle
House Number : 34
Age : 46 Gender : Male
Photo Available

227 SYF1521533
Name : Sangeeta Devidas Pavle
Husband's Name: Devidas Pavle
House Number : 34
Age : 44 Gender : Female
Photo Available

228 SYF1521541
Name : Yogita Santosh Pavle
Husband's Name: Santosh Pavle
House Number : 34
Age : 40 Gender : Female
Photo Available

229 SYF3394319
Name : Sarika Vyankati Savant
Husband's Name: Vyankati Savant
House Number : 34
Age : 32 Gender : Female
Photo Available

230 SYF2598324
Name : Sushilabai Lalaba Sawant
Husband's Name: Lalaba Sawant
House Number : 34
Age : 75 Gender : Female
Photo Available

231 BHW1496231
Name : Govind Lalabaji Sawant
Father's Name: Lalabaji Sawant
House Number : 34
Age : 43 Gender : Male
Photo Available

232 SYF1822147
Name : Vyankati Lalabaji Sawant
Father's Name: Lalabaji Sawant
House Number : 34
Age : 37 Gender : Male
Photo Available

233 SYF3839081
Name : Manjulabai Uttamrao Gayke
Husband's Name: Uttamrao Gayke
House Number : 35
Age : 58 Gender : Female
Photo Available

234 SYF3839099
Name : Khandu Gangaram Gayke
Father's Name: Gangaram Gayke
House Number : 35
Age : 58 Gender : Male
Photo Available

235 SYF3839107
Name : Sunitabai Khandu Gayke
Husband's Name: Khandu Gayke
House Number : 35
Age : 53 Gender : Female
Photo Available

236 BHW1479062
Name : Tukaram Uttam Gayke
Father's Name: Uttam Gayke
House Number : 35
Age : 48 Gender : Male
Photo Available

237 BHW1492180
Name : Sandhya Balaji Gayke
Husband's Name: Balaji Gayke
House Number : 35
Age : 42 Gender : Female
Photo Available

238 SYF3086758
Name : Chitrarekha Tukaram Gayke
Father's Name: Tukaram Gayke
House Number : 35
Age : 41 Gender : Female
Photo Available

239 BHW1475581
Name : Viththl L Uttam Gayke
Father's Name: Uttam Gayke
House Number : 35
Age : 41 Gender : Male
Photo Available

240 SYF1822154
Name : Vidhya Vitthal Jamake
Father's Name: Vitthal Jamake
House Number : 35
Age : 38 Gender : Female
Photo Available

241 SYF4374526
Name : Savita mirashe
Husband's Name: Haridas mirashe
House Number : 35
Age : 27 Gender : Female
Photo Available

242 BHW1495977
Name : Anita Parmeshwar Dokale
Husband's Name: Parmeshwar Dokale
House Number : 36
Age : 42 Gender : Female
Photo Available

243 SYF3839115
Name : Laxmi Bai Yadavrao Dokhale
Husband's Name: Yadavrao Dokhale
House Number : 36
Age : 68 Gender : Female
Photo Available

244 BHW1476571
Name : Sunita Rajaram Dokhale
Husband's Name: Rajaram Dokhale
House Number : 36
Age : 48 Gender : Female
Photo Available

245 SYF3839123
Name : Sham Rao Yadavrao Dokhale
Father's Name: Yadavrao Dokhale
House Number : 36
Age : 47 Gender : Male
Photo Available

246 SYF1571686
Name : Kantabai Sham Rao Dokhale
Husband's Name: Sham Rao Dokhale
House Number : 36
Age : 46 Gender : Female
Photo Available

247 BHW1495969
Name : Parmeshwar Yadavrao Dokhale
Father's Name: Yadavrao Dokale
House Number : 36
Age : 43 Gender : Male
Photo Available

248 SYF1822162
Name : Malanbai Bhimrao Dokhale
Husband's Name: Bhimrao Dokhale
House Number : 36
Age : 42 Gender : Female
Photo Available

249 BHW1478965
Name : Anusaya Parsram Dokhale
Husband's Name: Parsram Dokhale
House Number : 36
Age : 43 Gender : Female
Photo Available

250 SYF3793544
Name : Sachin Dokhale
Father's Name: Rajaram Dokhale
House Number : 36
Age : 27 Gender : Male
Photo Available

251 SYF4374351
Name : Sandip Dokhale
Father's Name: Rajaram Dokhale
House Number : 36
Age : 25 Gender : Male
Photo Available

252 SYF3697877
Name : Ashvini Ashok Jalpate
Husband's Name: Ashok Jalpate
House Number : 36
Age : 30 Gender : Female
Photo Available

253 SYF4374534
Name : Haridas Mirashe
Father's Name: Sudam Mirashe
House Number : 36
Age : 35 Gender : Male
Photo Available

254 SYF3839149
Name : Sham Rao Basaji Dokhale
Father's Name: Basaji Dokhale
House Number : 37
Age : 58 Gender : Male
Photo Available

255 SYF3839156
Name : Kalavatibai Sham Rao Dokhale
Husband's Name: Sham Rao Dokhale
House Number : 37
Age : 53 Gender : Female
Photo Available

256 SYF3086766
Name : ramchandra Basaji Dokhale
Father's Name: Basaji Dokhale
House Number : 37
Age : 43 Gender : Male
Photo Available

257 BHW1476613
Name : Sushila Shriram Dokhale
Husband's Name: Shriram Dokhale
House Number : 38
Age : 52 Gender : Female
Photo Available

258 SYF4531323
Name : Bhagwan Shriram Dokhale
Father's Name: Shriram Dokhale
House Number : 38
Age : 44 Gender : Male
Photo Available

259 SYF3839230
Name : Sainath Datta Dokhale
Father's Name: Datta Dokhale
House Number : 39
Age : 51 Gender : Male
Photo Available

260 SYF3698321
Name : Priyanka Sainath Dokhale
Father's Name: Sainath Dokhale
House Number : 39
Age : 28 Gender : Female
Photo Available

261 SYF3839248
Name : Parvatibai Shankar Dokhale
Husband's Name: Shankar Dokhale
House Number : 40
Age : 53 Gender : Female
Photo Available

262 SYF3296357
Name : Vaijnath Shankar Dokhale
Father's Name: Shankar Dokhale
House Number : 40
Age : 32 Gender : Male
Photo Available

263 SYF3698156
Name : Avinash Shankar Dokhale
Father's Name: Shankar Dokhale
House Number : 40
Age : 30 Gender : Male
Photo Available

264 SYF4488870
Name : AASHATAI AVINASH DOKHLE
Husband's Name: AVINASH DOKHLE
House Number : 40
Age : 23 Gender : Female
Photo Available

265 SYF3837705
Name : Gunabai Madhav Dokhale
Husband's Name: Madhav Dokhale
House Number : 41
Age : 63 Gender : Female
Photo Available

266 BHW1475110
Name : Maroti Sadashiv Dokale
Father's Name: Sadashiv Dokale
House Number : 42
Age : 43 Gender : Male
Photo Available

267 SYF3839271
Name : Radha Bai Vitthal Dokhale
Husband's Name: Vitthal Dokhale
House Number : 42
Age : 63 Gender : Female
Photo Available

268 BHW1496728
Name : Sadashiv Kondba Dokhale
Father's Name: Kondba Dokhale
House Number : 42
Age : 58 Gender : Male
Photo Available

269 SYF3839255
Name : Vatsalabai Sadashiv Dokhale
Husband's Name: Sadashiv Dokhale
House Number : 42
Age : 53 Gender : Female
Photo Available

270 SYF3839263
Name : Sheshrao Kondba Dokhale
Father's Name: Kondba Dokhale
House Number : 42
Age : 48 Gender : Male
Photo Available

271 BHW1478478
Name : Baburao Vitthal Dokhale
Father's Name: Vitthal Dokhale
House Number : 42
Age : 43 Gender : Male
Photo Available

272 SYF1520683
Name : Sanjana Maroti Dokhale
Husband's Name: Maroti Dokhale
House Number : 42
Age : 37 Gender : Female
Photo Available

273 SYF3246907
Name : Anjana Balaji Dokhale
Husband's Name: Balaji Dokhale
House Number : 42
Age : 39 Gender : Female
Photo Available

274 SYF1822170
Name : Ranjana Baburao Dokhale
Husband's Name: Baburao Dokhale
House Number : 42
Age : 36 Gender : Female
Photo Available

275 SYF2938876
Name : Satvaji Sadashiv Dokhale
Father's Name: Sadashiv Dokhale
House Number : 42
Age : 34 Gender : Male
Photo Available

276 SYF2938884
Name : Chandrakant Vitthalrao Dokhale
Father's Name: Vitthalrao Dokhale
House Number : 42
Age : 32 Gender : Male
Photo Available

277 SYF2939387
Name : Kavita Satvaji Dokhale
Husband's Name: Satvaji Dokhale
House Number : 42
Age : 30 Gender : Female
Photo Available

278 SYF3793577
Name : Kalpana Dokhale
Husband's Name: Chandrakant Dokhale
House Number : 42
Age : 30 Gender : Female
Photo Available

279 SYF3625480
Name : Dnyaneshwar Khandu Gayake
Father's Name: Khandu Gayake
House Number : 42
Age : 29 Gender : Male
Photo Available

280 SYF4410023
Name : Punam Dnyaneshwar Gayke
Husband's Name: dnyaneshwar Gayke
House Number : 42
Age : 26 Gender : Female
Photo Available

281 SYF4374476
Name : Pradip Mirashe
Father's Name: Maroti Mirashe
House Number : 44
Age : 28 Gender : Male
Photo Available

282 SYF4374500
Name : Omtai Mane
Husband's Name: Pandurang Mane
House Number : 45
Age : 30 Gender : Female
Photo Available

283 SYF4374765
Name : Rangrao Tokalwad
Father's Name: Ganpat Tokalwad
House Number : 45
Age : 25 Gender : Male
Photo Available

284 SYF4488151
Name : SHITAL TOKALWAD
Husband's Name: RANGRAO TOKALWAD
House Number : 45
Age : 25 Gender : Female
Photo Available

285 SYF3839305
Name : Bhagyarathabai Kishan Dokhale
Husband's Name: Kishan Dokhale
House Number : 46
Age : 73 Gender : Female
Photo Available

286 BHW1478510
Name : Satyanarayan Kishanrao Dokhale
Father's Name: Kishanrao Dokhale
House Number : 46
Age : 47 Gender : Male
Photo Available

287 BHW1478502
Name : Kaushalya Satyanarayan Dokhale
Husband's Name: Satyanarayan Dokhale
House Number : 46
Age : 45 Gender : Female
Photo Available

288 BHW1478460
Name : Subhash Kisan Dokhale
Father's Name: Kisan Dokhale
House Number : 46
Age : 42 Gender : Male
Photo Available

289 BHW1478494
Name : Manjusha Subhash Dokhale
Husband's Name: Subhash Dokhale
House Number : 46
Age : 40 Gender : Female
Photo Available

290 SYF4374393
Name : Satyanarayan Dokhale
Father's Name: Rahul Dokhale
House Number : 46
Age : 24 Gender : Male
Photo Available

291 SYF3839313
Name : Narmada Bhujaji Gobade
Husband's Name: Bhujaji Gobade
House Number : 48
Age : 83 Gender : Female
Photo Available

292 SYF3839321
Name : Pandit Bhujaji Gobade
Father's Name: Bhujaji Gobade
House Number : 48
Age : 63 Gender : Male
Photo Available

293 SYF3839347
Name : Laxmi Bai Pandit Gobade
Husband's Name: Pandit Gobade
House Number : 48
Age : 58 Gender : Female
Photo Available

294 SYF3793247
Name : Balaji Gobade
Father's Name: Pandit Gobade
House Number : 48
Age : 31 Gender : Male
Photo Available

295 SYF3793130
Name : Rangrao Gobade
Father's Name: Dagdu Gobade
House Number : 49
Age : 58 Gender : Male
Photo Available

296 SYF3839362
Name : Chandrao Dagdu Gobade
Father's Name: Dagdu Gobade
House Number : 49
Age : 53 Gender : Male
Photo Available

297 SYF3839370
Name : Tanhabai Chandrao Gobade
Husband's Name: Chandrao Gobade
House Number : 49
Age : 48 Gender : Female
Photo Available

298 SYF3839388
Name : Sumanbai Rangarao Gobade
Husband's Name: Rangarao Gobade
House Number : 49
Age : 48 Gender : Female
Photo Available

299 SYF3698180
Name : Sunil Rangrao Gobade
Father's Name: Rangrao Gobade
House Number : 49
Age : 29 Gender : Male
Photo Available

300 SYF3839396
Name : Bapoorao Bhujaji Gobade
Father's Name: Bhujaji Gobade
House Number : 50
Age : 58 Gender : Male
Photo Available

301 SYF3839404
Name : Pdminabai Bapurao Godade
Husband's Name: Bapurao Godade
House Number : 50
Age : 53 Gender : Female
Photo Available

302 SYF3791035
Name : Babu Gobade
Father's Name: Bapurao Gabade
House Number : 50
Age : 39 Gender : Male
Photo Available

303 SYF3246923
Name : Parvati Bapurao Gobade
Father's Name: Bapurao Gobade
House Number : 50
Age : 31 Gender : Third Gender
Photo Available

304 SYF3839446
Name : Devrao Data Dokhale
Father's Name: Data Dokhale
House Number : 51
Age : 63 Gender : Male
Photo Available

305 SYF3839453
Name : Panchafulabai Devrao Dokhale
Husband's Name: Devrao Dokhale
House Number : 51
Age : 58 Gender : Female
Photo Available

306 SYF2938892
Name : Madhav Devrao Dokhale
Father's Name: Devrao Dokhale
House Number : 51
Age : 32 Gender : Male
Photo Available

307 SYF4374773
Name : Suraj Pinnalwar
Father's Name: Santosh Pinnalwar
House Number : 51
Age : 24 Gender : Male
Photo Available

308 SYF3698248
Name : Maroti Madhav Dokhale
Father's Name: Madhav Dokhale
House Number : 52
Age : 54 Gender : Male
Photo Available

309 SYF3698255
Name : Kaushalya Maroti Dokhale
Husband's Name: Maroti Dokhale
House Number : 52
Age : 48 Gender : Female
Photo Available

310 SYF3698271
Name : Sachin Maruti Dokhale
Father's Name: Maruti Dokhale
House Number : 52
Age : 29 Gender : Male
Photo Available

311 SYF3698263
Name : Manisha Maruti Dokhale
Father's Name: Maruti Dokhale
House Number : 52
Age : 27 Gender : Female
Photo Available

312 SYF2938900
Name : Sangita Ambadas Khupase
Husband's Name: Ambadas Khupase
House Number : 52
Age : 37 Gender : Female
Photo Available

313 SYF3839461
Name : Sulochanabai Kerba Khupse
Husband's Name: Kerba Khupse
House Number : 52
Age : 77 Gender : Female
Photo Available

314 SYF3839479
Name : Kerba Satava Khupse
Father's Name: Satava Khupse
House Number : 52
Age : 58 Gender : Male
Photo Available

315 SYF3697943
Name : Sudarshan Maroti Panchal
Father's Name: Maroti Panchal
House Number : 52
Age : 27 Gender : Male
Photo Available

316 SYF3521242
Name : Ashok Shamrao Jadhav
Father's Name: Shamrao Jadhav
House Number : 53
Age : 65 Gender : Male
Photo Available

317 SYF3698230
Name : Shriniwas Ashok Jadhav
Father's Name: Ashok Jadhav
House Number : 53
Age : 27 Gender : Male
Photo Available

318 SYF3839487
Name : Tukaram Maneji Kharavade
Father's Name: Maneji Kharavade
House Number : 53
Age : 73 Gender : Male
Photo Available

319 SYF3839495
Name : Sarjabai Tukaram Kharavade
Husband's Name: Tukaram Kharavade
House Number : 53
Age : 68 Gender : Female
Photo Available

320 SYF3839503
Name : Dagdu Gyanoba Kharavade
Father's Name: Gyanoba Kharavade
House Number : 54
Age : 58 Gender : Male
Photo Available

321 SYF3839511
Name : Laxmi Bai Dagdu Kharavade
Husband's Name: Dagdu Kharavade
House Number : 54
Age : 53 Gender : Female
Photo Available

322 SYF4393740
Name : Manik Kharode
Father's Name: Dagadu Kharode
House Number : 54
Age : 23 Gender : Male
Photo Available

323 SYF3839529
Name : Bharjabai Madhav Dokhale
Husband's Name: Madhav Dokhale
House Number : 55
Age : 51 Gender : Female
Photo Available

324 SYF1822220
Name : Dynaneshvar Madhav Dokhale
Father's Name: Madhav Dokhale
House Number : 55
Age : 39 Gender : Male
Photo Available

325 SYF1822246
Name : Bhujang Madhav Rao Dokhale
Father's Name: Madhav Rao Dokhale
House Number : 55
Age : 39 Gender : Male
Photo Available

326 SYF1822204
Name : Sajjan Madhav Rao Dokhale
Father's Name: Madhav Rao Dokhale
House Number : 55
Age : 38 Gender : Male
Photo Available

327 SYF1822238
Name : Sunanda Bhujangrav Dokhale
Father's Name: Bhujangrav Dokhale
House Number : 55
Age : 38 Gender : Female
Photo Available

328 SYF1822212
Name : Anusaya Dynaneshvar Dokhale
Husband's Name: Dynaneshvar Dokhale
House Number : 55
Age : 36 Gender : Female
Photo Available

329 SYF3394228
Name : Sitabai Sanjay Dokhale
Husband's Name: Sanjay Dokhale
House Number : 55
Age : 34 Gender : Female
Photo Available

330 SYF4374336
Name : Ganesh Mane
Father's Name: Kishan Mane
House Number : 55
Age : 62 Gender : Male
Photo Available

331 SYF3751062
Name : Namdev Mendewad
Father's Name: Nagorao Mendewad
House Number : 55
Age : 27 Gender : Male
Photo Available

332 SYF3698339
Name : Priyanka Ravikumar Panchal
Husband's Name: Ravikumar Panchal
House Number : 55
Age : 26 Gender : Female
Photo Available

333 SYF3839560
Name : Parasram Khandu Katamode
Father's Name: Khandu Katamode
House Number : 56
Age : 48 Gender : Male
Photo Available

334 BHW1478973
Name : Laxmi Bai Parasram Katamode
Husband's Name: Parasram Katamode
House Number : 56
Age : 43 Gender : Female
Photo Available

335 SYF2938926
Name : Yadav Sambhaji Katmode
Father's Name: Sambhaji Katmode
House Number : 56
Age : 62 Gender : Male
Photo Available

336 SYF2938918
Name : Nilavati Yadav Katmode
Husband's Name: Yadav Katmode
House Number : 56
Age : 58 Gender : Female
Photo Available

337 SYF4488961
Name : SAMBHAJI KHANDUJI KATMODE
Father's Name: KHANDUJI KATMODE
House Number : 56
Age : 47 Gender : Male
Photo Available

338 SYF4488979
Name : PARVATIBAI SAMBHAJI KATMODE
Husband's Name: SAMBHAJI KATMODE
House Number : 56
Age : 38 Gender : Female
Photo Available

339 SYF3698032
Name : Vishranti Datta Katmode
Husband's Name: Datta Katmode
House Number : 56
Age : 30 Gender : Female
Photo Available

340 SYF4488953
Name : SANDIP PARASRAM KATMODE
Father's Name: PARASRAM KATMODE
House Number : 56
Age : 24 Gender : Male
Photo Available

341 BHW1476175
Name : Sangitabai Sanjay Manthevad
Father's Name: Sanjay Manthevad
House Number : 58
Age : 38 Gender : Female
Photo Available

342 SYF1521558
Name : Nagorav Gangadhar Medhevad
Father's Name: Gangadhar Medhevad
House Number : 58
Age : 48 Gender : Male
Photo Available

343 BHW1475748
Name : Sanjay Gangadhar Mendevad
Father's Name: Gangadhar Mendevad
House Number : 58
Age : 44 Gender : Male
Photo Available

344 SYF3698057
Name : Sopan Nagorao Mendewad
Father's Name: Nagorao Mendewad
House Number : 58
Age : 29 Gender : Male
Photo Available

345 SYF3086790
Name : Anusayabai Gangadhar Mendhevad
Husband's Name: Gangadhar Medhevad
House Number : 58
Age : 58 Gender : Female
Photo Available

346 BHW1475151
Name : Somnath Gangadhar Mendhevad
Father's Name: Gangadhar Mendhevad
House Number : 58
Age : 42 Gender : Male
Photo Available

347 BHW1492172
Name : Ranjanabai Somnath Methevad
Father's Name: Somnath Methevad
House Number : 58
Age : 38 Gender : Female
Photo Available

348 SYF3839586
Name : Laxmi Bai Ram Rao Dokhale
Husband's Name: Ram Rao Dokhale
House Number : 59
Age : 63 Gender : Female
Photo Available

349 SYF1561364
Name : Narayan Ram Rao Dokhale
Father's Name: Ram Rao Dokhale
House Number : 59
Age : 39 Gender : Male
Photo Available

350 SYF1822261
Name : Prakash Ram Rao Dokhale
Father's Name: Ram Rao Dokhale
House Number : 59
Age : 36 Gender : Male
Photo Available

351 SYF3793148
Name : Amol Mane
Father's Name: Ganesh Mane
House Number : 59
Age : 39 Gender : Male
Photo Available

352 SYF4374542
Name : Laxman Shinde
Father's Name: Nagnath Shinde
House Number : 59
Age : 30 Gender : Male
Photo Available

353 SYF3839594
Name : Baburao Ramchandra Kharavade
Father's Name: Ramchandra Kharavade
House Number : 60
Age : 48 Gender : Male
Photo Available

354 BHW1490986
Name : Bhaurav Ramchandra Kharavade
Father's Name: Ramchandra Kharavade
House Number : 60
Age : 47 Gender : Male
Photo Available

355 BHW1477884
Name : Laxmi Bai Bhaurav Kharavade
Husband's Name: Bhaurav Kharavade
House Number : 60
Age : 46 Gender : Female
Photo Available

356 BHW1477421
Name : Rukhamabai Baburao Kharavade
Husband's Name: Baburao Kharavade
House Number : 60
Age : 46 Gender : Female
Photo Available

357 SYF3839636
Name : Sundarabai Devidas Mendhevaar
Husband's Name: Devidas Mendhevaar
House Number : 61
Age : 53 Gender : Female
Photo Available

358 SYF3839644
Name : Rukhmaji Madhav Medhevad
Father's Name: Madhav Medhevad
House Number : 61
Age : 53 Gender : Male
Photo Available

359 SYF3698099
Name : Parmeshwar Devidas` Mendewad
Father's Name: Devidas` Mendewad
House Number : 61
Age : 31 Gender : Male
Photo Available

360 SYF3698107
Name : Nandabai Maroti Mendewad
Husband's Name: Maroti Mendewad
House Number : 61
Age : 31 Gender : Female
Photo Available

361 SYF3698123
Name : Maroti Devidas Mendewad
Father's Name: Devidas Mendewad
House Number : 61
Age : 29 Gender : Male
Photo Available

362 SYF3698115
Name : Krushna Rukhamaji Mendewad
Father's Name: Rukhamaji Mendewad
House Number : 61
Age : 27 Gender : Male
Photo Available

363 SYF3839610
Name : Prayagbai Rukhamaji Mendhevad
Husband's Name: Rukhamaji Mendhevad
House Number : 61
Age : 48 Gender : Female
Photo Available

364 SYF4520268
Name : Bhagyashri Parmeshwar Mendhewad
Husband's Name: Parmeshwar Mendhewad
House Number : 61
Age : 27 Gender : Female
Photo Available

365 SYF4488896
Name : MADHURI KRUSHNA MENDHEWAD
Husband's Name: KRUSHNA RUKHMAJI MENDHEWAD
House Number : 61
Age : 24 Gender : Female
Photo Available

366 BHW1478643
Name : Kailash Sham Rao Gobade
Father's Name: Sham Rao Gobade
House Number : 62
Age : 54 Gender : Male
Photo Available

367 BHW1478668
Name : Chandrakala Kailash Gobade
Husband's Name: Kailash Gobade
House Number : 62
Age : 44 Gender : Female
Photo Available

368 SYF2939403
Name : Janabai Vishwambar Gobade
Husband's Name: Vishwambar Gobade
House Number : 63
Age : 68 Gender : Female
Photo Available

369 SYF3086808
Name : laxman Gangaram Gobade
Father's Name: Gangaram Gobade
House Number : 63
Age : 50 Gender : Male
Photo Available

370 SYF2938967
Name : Vilas Vishvambhar Gobade
Father's Name: Vishvambhar Gobade
House Number : 63
Age : 48 Gender : Male
Photo Available

371 SYF3839677
Name : Baliram Gangaram Gobade
Father's Name: Gangaram Gobade
House Number : 63
Age : 48 Gender : Male
Photo Available

372 SYF3839669
Name : Laxmi Bai Lodaba Gobade
Husband's Name: Lodaba Gobade
House Number : 63
Age : 46 Gender : Female
Photo Available

373 BHW1479104
Name : Seetaram Gangaram Gobade
Father's Name: Gangaram Gibade
House Number : 63
Age : 44 Gender : Male
Photo Available

374 BHW1478692
Name : Neelabai Seetaram Gobade
Husband's Name: Seetaram Gobade
House Number : 63
Age : 44 Gender : Female
Photo Available

375 BHW1475078
Name : Kalavati Baliram Gobade
Husband's Name: Baliram Gobade
House Number : 63
Age : 44 Gender : Female
Photo Available

376 SYF2938983
Name : Vandanabai Vilas Gobade
Husband's Name: Vilas Gobade
House Number : 63
Age : 43 Gender : Female
Photo Available

377 SYF2938959
Name : Anusaya Kailas Gobade
Husband's Name: Kailas Gobade
House Number : 63
Age : 38 Gender : Female
Photo Available

378 SYF2938934
Name : PRAKASH VISHWAMBHAR GABADE
Father's Name: Vishvambhar Gobaded
House Number : 63
Age : 34 Gender : Male
Photo Available

379 SYF2938942
Name : Vijaymala Prakash Gobade
Husband's Name: Prakash Gobade
House Number : 63
Age : 31 Gender : Female
Photo Available

380 SYF3697893
Name : Gangasagar Ajinkya Pinnalwar
Husband's Name: Ajinkya Pinnalwar
House Number : 63
Age : 31 Gender : Female
Photo Available

381 SYF3839693
Name : Datta Sambhaji Gobade
Father's Name: Sambhaji Gobade
House Number : 64
Age : 58 Gender : Male
Photo Available

382 SYF3839701
Name : Anitabai Datta Gobade
Husband's Name: Datta Gobade
House Number : 64
Age : 53 Gender : Female
Photo Available

383 BHW1475862
Name : Pandit Sambhaji Gobade
Father's Name: Sambhaji Gobade
House Number : 64
Age : 51 Gender : Male
Photo Available

384 SYF3839719
Name : Hiraman Sambhaji Gobade
Father's Name: Sambhaji Gobade
House Number : 64
Age : 48 Gender : Male
Photo Available

385 SYF1520709
Name : Limbabai Sarjerao Naik
Husband's Name: Sambhaji Gobade
House Number : 64
Age : 47 Gender : Female
Photo Available

386 SYF3839727
Name : Kantabai Hiraman Gobade
Husband's Name: Hiraman Gobade
House Number : 64
Age : 46 Gender : Female
Photo Available

387 SYF4355061
Name : DHONDBA vitthal Gobade
Father's Name: Vitthal Gobade
House Number : 65
Age : 27 Gender : Male
Photo Available

388 SYF3839735
Name : Sham Rao Punjaji Gobade
Father's Name: Punjaji Gobade
House Number : 65
Age : 68 Gender : Male
Photo Available

389 SYF3839743
Name : Kalavatibai Sham Rao Gobade
Husband's Name: Sham Rao Gobade
House Number : 65
Age : 63 Gender : Female
Photo Available

390 BHW1478890
Name : Balaji Gobade
Father's Name: Shamrao Gobade
House Number : 65
Age : 42 Gender : Male
Photo Available

391 SYF4374559
Name : Ganesh Babulkar
Father's Name: Tukaram Babulkar
House Number : 66
Age : 36 Gender : Male
Photo Available

392 SYF2755833
Name : neeta lakshman mane
Husband's Name: lakshman mane
House Number : 66
Age : 36 Gender : Female
Photo Available

393 SYF3697927
Name : Dnyaneshwar Kisanrao Rane
Father's Name: Kisanrao Rane
House Number : 66
Age : 27 Gender : Male
Photo Available

394 SYF1520717
Name : Taterao Kondba Gobade
Father's Name: Kondba Gobade
House Number : 67
Age : 63 Gender : Male
Photo Available

395 SYF1822279
Name : Paramenshvar Taterao Gobade
Father's Name: Taterao Gobade
House Number : 67
Age : 42 Gender : Male
Photo Available

396 SYF1520725
Name : Rajeshvar Taterao Gobade
Father's Name: Taterao Gobade
House Number : 67
Age : 40 Gender : Male
Photo Available

397 SYF1822287
Name : Somnath Taterao Gobade
Father's Name: Taterao Gobade
House Number : 67
Age : 36 Gender : Male
Photo Available

398 SYF2938991
Name : Vitthal Taterao Gobade
Father's Name: Taterao Gobade
House Number : 67
Age : 33 Gender : Male
Photo Available

399 SYF3839784
Name : Anjanabai Govinda Gobade
Husband's Name: Govinda Gobade
House Number : 68
Age : 68 Gender : Female
Photo Available

400 BHW1478676
Name : Suman Ram Rao Gobade
Husband's Name: Ram Rao Gobade
House Number : 68
Age : 44 Gender : Female
Photo Available

401 SYF4374716
Name : Laxman Mane
Father's Name: Balaji Mane
House Number : 69
Age : 25 Gender : Male
Photo Available

402 SYF4374567
Name : Suresh Mirashe
Father's Name: Parmeshwar Mirashe
House Number : 69
Age : 24 Gender : Male
Photo Available

403 SYF3839792
Name : Ambubai Govinda Vanole
Husband's Name: Govinda Vanole
House Number : 69
Age : 88 Gender : Female
Photo Available

404 SYF3840766
Name : Tukaram Govinda Vanole
Father's Name: Govinda Vanole
House Number : 69
Age : 63 Gender : Male
Photo Available

405 SYF3840774
Name : Leelabai Sakharam Vanole
Husband's Name: Sakharam Vanole
House Number : 69
Age : 58 Gender : Female
Photo Available

406 SYF3840782
Name : Subhash Govind Vanole
Father's Name: Govind Vanole
House Number : 69
Age : 53 Gender : Male
Photo Available

407 SYF3840790
Name : Saraswatibai Subhash Vanole
Husband's Name: Subhash Vanole
House Number : 69
Age : 48 Gender : Female
Photo Available

408 SYF2939015
Name : Datta Sakharam Vanole
Father's Name: Sakharam Vanole
House Number : 69
Age : 35 Gender : Male
Photo Available

409 SYF2939098
Name : Digambar Tukaram Vanole
Father's Name: Tukaram Vanole
House Number : 69
Age : 33 Gender : Male
Photo Available

410 SYF2939023
Name : Vishvambhar Sakharam Vanole
Father's Name: Sakharam Vanole
House Number : 69
Age : 31 Gender : Male
Photo Available

411 SYF2939510
Name : Vandanabai Datta Wanole
Husband's Name: Datta Wanole
House Number : 69
Age : 33 Gender : Female
Photo Available

412 SYF3394327
Name : Shivaji Subhash Wanole
Father's Name: Subhash Wanole
House Number : 69
Age : 31 Gender : Male
Photo Available

413 SYF3394277
Name : Govind Sakharam Wanole
Father's Name: Sakharam Wanole
House Number : 69
Age : 32 Gender : Male
Photo Available

414 SYF4488912
Name : RUPA DIGAMBAR WANOLE
Husband's Name: DIGAMBAR TUKARAM WANOLE
House Number : 69
Age : 27 Gender : Female
Photo Available

415 SYF3840832
Name : Laxmi Bai Madhav Kharavade
Husband's Name: Madhav Kharavade
House Number : 70
Age : 53 Gender : Female
Photo Available

416 SYF3840808
Name : Pandurang Girmaji Kharavade
Father's Name: Girmaji Kharavade
House Number : 70
Age : 53 Gender : Male
Photo Available

417 SYF3840816
Name : Rangubai Pandurang Kharavade
Husband's Name: Pandurang Kharavade
House Number : 70
Age : 48 Gender : Female
Photo Available

418 SYF2939031
Name : Mangal Piraji Kharwade
Husband's Name: Piraji Kharwade
House Number : 70
Age : 34 Gender : Female
Photo Available

419 SYF2939452
Name : Piraji Pandurang Kharwade
Father's Name: Pandurang Kharwade
House Number : 70
Age : 34 Gender : Male
Photo Available

420 SYF4374633
Name : Rekha Mane
Husband's Name: Gajanan Mane
House Number : 71
Age : 26 Gender : Female
Photo Available

421 SYF4374591
Name : Sakharam Wanole
Father's Name: Govind Wanole
House Number : 71
Age : 84 Gender : Male
Photo Available

422 SYF3840865
Name : Maroti Girmaji Kharavade
Father's Name: Girmaji Kharavade
House Number : 72
Age : 68 Gender : Male
Photo Available

423 SYF3840857
Name : Tanabai Khandu Kharavade
Husband's Name: Khandu Kharavade
House Number : 72
Age : 63 Gender : Female
Photo Available

424 BHW1475763
Name : Sheshrao Khandu Kharavade
Father's Name: Khandu Kharavade
House Number : 72
Age : 46 Gender : Male
Photo Available

425 BHW1475847
Name : Vandana Sheshrao Kharavade
Husband's Name: Sheshrao Kharavade
House Number : 72
Age : 44 Gender : Female
Photo Available

426 SYF3296423
Name : Shivaji Maroti Kharode
Father's Name: Maroti Kharode
House Number : 72
Age : 37 Gender : Male
Photo Available

427 SYF3296340
Name : Partabai Shankar Kharode
Husband's Name: Shankar Kharode
House Number : 72
Age : 31 Gender : Female
Photo Available

428 SYF3793668
Name : Sunil Kharode
Father's Name: Shesherao Kharode
House Number : 72
Age : 27 Gender : Male
Photo Available

429 SYF2939395
Name : Shankar Maroti Kharwade
Father's Name: Maroti Kharawde
House Number : 72
Age : 34 Gender : Male
Photo Available

430 SYF3793643
Name : Balaji Kharwade
Father's Name: Khandu Kharwade
House Number : 72
Age : 27 Gender : Male
Photo Available

431 SYF4490991
Name : ARUNA BALAJI KHARWADE
Husband's Name: BALAJI KHARWADE
House Number : 72
Age : 24 Gender : Female
Photo Available

432 SYF4374641
Name : Raju Mane
Father's Name: Pandit Mane
House Number : 73
Age : 30 Gender : Male
Photo Available

433 SYF4528956
Name : Ujwala Mane
Husband's Name: Raju Mane
House Number : 73
Age : 26 Gender : Female
Photo Available

434 SYF3793270
Name : Laxmibai Mirashe
Husband's Name: Vitthal Mirashe
House Number : 73
Age : 34 Gender : Female
Photo Available

435 SYF3793122
Name : Mukta Vacchewar
Husband's Name: Sanjay Vacchewar
House Number : 74
Age : 34 Gender : Female
Photo Available

436 SYF3840873
Name : Abajee Lokadoba Vachchhevad
Father's Name: Lokadoba Vachchhevad
House Number : 74
Age : 63 Gender : Male
Photo Available

437 BHW1496694
Name : Savitrabai Prahlad Vachchhevad
Husband's Name: Prahlad Vachchhevad
House Number : 74
Age : 63 Gender : Female
Photo Available

438 SYF3840881
Name : Anant Prahlad Vachchhevad
Father's Name: Prahlad Vachchhevad
House Number : 74
Age : 45 Gender : Male
Photo Available

439 BHW1479138
Name : Nagnath Prahlad Vachchhevad
Father's Name: Prahlad Vachchhevad
House Number : 74
Age : 45 Gender : Male
Photo Available

440 BHW1479443
Name : Sangeeta Anant Vachchhevad
Husband's Name: Anant Vachchhevad
House Number : 74
Age : 40 Gender : Female
Photo Available

441 SYF4401584
Name : Wacchewar Wacchewar
Father's Name: Sandip Wacchewar
House Number : 74
Age : 25 Gender : Male
Photo Available

442 SYF4401626
Name : Pradeep Wacchewar
Father's Name: Ananta Wacchewar
House Number : 74
Age : 25 Gender : Male
Photo Available

443 SYF3793650
Name : Vanamala Wachchhewad
Husband's Name: Nagnath Wachchhewad
House Number : 74
Age : 38 Gender : Female
Photo Available

444 SYF4374674
Name : Avinash Jadhav
Father's Name: Ashokrao Jadhav
House Number : 75
Age : 25 Gender : Male
Photo Available

445 SYF4374575
Name : Anjanabai Mulekar
Husband's Name: Damaji Mulekar
House Number : 75
Age : 40 Gender : Female
Photo Available

446 SYF3840899
Name : Parvatibai Abajee Vachchhevad
Husband's Name: Abajee Vachchhevad
House Number : 75
Age : 58 Gender : Female
Photo Available

447 SYF3296258
Name : yogesh vilas wacchewar
Father's Name: Vilasrao Waccheware
House Number : 75
Age : 30 Gender : Male
Photo Available

448 SYF3840907
Name : Shobhabai Vilas Vachchhevad
Husband's Name: Vilas Vachchhevad
House Number : 76
Age : 48 Gender : Female
Photo Available

449 SYF4374583
Name : Lata Mirashe
Husband's Name: Sandip Mirashe
House Number : 77
Age : 28 Gender : Female
Photo Available

450 BHW1477173
Name : Sumitrabai Prabhu Vachchhevad
Husband's Name: Prabhu Vachchhevad
House Number : 77
Age : 63 Gender : Female
Photo Available

451 SYF1822311
Name : Babarao Prabhu Vachchhevar
Father's Name: Prabhu Vachchhevar
House Number : 77
Age : 35 Gender : Male
Photo Available

452 SYF3840931
Name : Tikaram Mahadu Vachchhevad
Father's Name: Mahadu Vachchhevad
House Number : 78
Age : 73 Gender : Male
Photo Available

453 SYF3840949
Name : Laxmi Bai Tikaram Vachchhevad
Husband's Name: Tikaram Vachchhevad
House Number : 78
Age : 68 Gender : Female
Photo Available

454 SYF3840956
Name : Gajanan Tikaram Vachchhevad
Father's Name: Tikaram Vachchhevad
House Number : 78
Age : 48 Gender : Male
Photo Available

455 BHW1476456
Name : Madhav Tukar Am Vachchhevad
Father's Name: Tukar Am Vachchhevad
House Number : 78
Age : 41 Gender : Male
Photo Available

456 BHW1478601
Name : Balaji T Kar Am Vachchhevad
Father's Name: T Kar Am Vachchhevad
House Number : 78
Age : 40 Gender : Male
Photo Available

457 SYF3247152
Name : Anuradha Balaji Wachchewad
Husband's Name: Balaji Wachchewad
House Number : 78
Age : 32 Gender : Female
Photo Available

458 SYF3840964
Name : Anitabai Rama Vachchhevad
Husband's Name: Rama Vachchhevad
House Number : 79
Age : 53 Gender : Female
Photo Available

459 SYF3840972
Name : Laxman Ganpat Vachchhevad
Father's Name: Ganpat Vachchhevad
House Number : 79
Age : 48 Gender : Male
Photo Available

460 SYF3840980
Name : Nandabai Laxman Vachchhevad
Husband's Name: Laxman Vachchhevad
House Number : 79
Age : 46 Gender : Female
Photo Available

461 SYF3698131
Name : Govind Laxman Vachchhewar
Father's Name: Laxman Vachchhewar
House Number : 79
Age : 30 Gender : Male
Photo Available

462 SYF4415931
Name : Vaishali Wacchewar
Husband's Name: Govind Wacchewar
House Number : 79
Age : 23 Gender : Female
Photo Available

463 SYF4374377
Name : Khandu Dukare
Father's Name: Baburao Dukare
House Number : 80
Age : 25 Gender : Male
Photo Available

464 SYF3840998
Name : Janabai Madhav Chalar
Husband's Name: Madhav Chalar
House Number : 81
Age : 83 Gender : Female
Photo Available

465 SYF3841004
Name : Shivaji Madhavrao Chellar
Father's Name: Madhav Chalar
House Number : 81
Age : 53 Gender : Male
Photo Available

466 SYF3841020
Name : Gangadhar Madhav Chalar
Father's Name: Madhav Chalar
House Number : 81
Age : 49 Gender : Male
Photo Available

467 SYF3841012
Name : Shobha Shivaji Chellar
Husband's Name: Shivaji Chalar
House Number : 81
Age : 48 Gender : Female
Photo Available

468 BHW1477249
Name : Kantabai Gangadhar Chalar
Husband's Name: Gangadhar Chalar
House Number : 81
Age : 47 Gender : Female
Photo Available

469 SYF3841038
Name : Digambar Madhav Chalar
Father's Name: Madhav Chalar
House Number : 81
Age : 46 Gender : Male
Photo Available

470 SYF3793684
Name : Avinash Chalare
Father's Name: Shivaji Chalare
House Number : 81
Age : 27 Gender : Male
Photo Available

471 BHW1477231
Name : Parvati Digambar Challar
Husband's Name: Digambar Challar
House Number : 81
Age : 43 Gender : Female
Photo Available

472 SYF1520741
Name : Shesherao Madhav Rao Challar
Father's Name: Madhav Rao Challar
House Number : 81
Age : 36 Gender : Male
Photo Available

473 SYF1822329
Name : Amrit Madhav Chelar
Father's Name: Madhav Chelar
House Number : 81
Age : 37 Gender : Male
Photo Available

474 SYF1822337
Name : Kamla Amrit Chelar
Husband's Name: Amrit Chelar
House Number : 81
Age : 37 Gender : Female
Photo Available

475 SYF3296407
Name : Gangasakar Sheshrao Chellar
Husband's Name: Sheshrao Chellar
House Number : 81
Age : 30 Gender : Female
Photo Available

476 BHW1475177
Name : Ole Subhash Sat Va D
Father's Name: Ole Sat Va D
House Number : 82
Age : 44 Gender : Male
Photo Available

477 SYF1571728
Name : Sharjabai Maroti Dhole
Husband's Name: Maroti Dhole
House Number : 82
Age : 74 Gender : Female
Photo Available

478 SYF3841053
Name : Nagorav Maroti Dhole
Father's Name: Maroti Dhole
House Number : 82
Age : 58 Gender : Male
Photo Available

479 SYF3841061
Name : Nilavatibai Nagorav Dhole
Father's Name: Nagorav Dhole
House Number : 82
Age : 53 Gender : Female
Photo Available

480 SYF4491023
Name : SALANKA MADHAV DHOLE
Husband's Name: MADHAV DHOLE
House Number : 82
Age : 28 Gender : Female
Photo Available

481 BHW1475946
Name : Shantabai Waman Vagatakar
Husband's Name: Waman Vagatakar
House Number : 82
Age : 59 Gender : Female
Photo Available

482 SYF3841079
Name : Bapurao Kondba Mane
Father's Name: Kondba Mane
House Number : 83
Age : 58 Gender : Male
Photo Available

483 SYF3841087
Name : Malanbai Bapurao Mane
Husband's Name: Bapurao Mane
House Number : 83
Age : 53 Gender : Female
Photo Available

484 SYF3841095
Name : Suresh Kondba Mane
Father's Name: Kondba Mane
House Number : 83
Age : 53 Gender : Male
Photo Available

485 SYF3841103
Name : Kalavatibai Suresh Mane
Husband's Name: Suresh Mane
House Number : 83
Age : 48 Gender : Female
Photo Available

486 SYF1520758
Name : Balaji Chandrao Mane
Father's Name: Chandrao Mane
House Number : 83
Age : 36 Gender : Male
Photo Available

487 SYF1822386
Name : Rekha Suresh Mane
Husband's Name: Suresh Mane
House Number : 83
Age : 35 Gender : Female
Photo Available

488 SYF3247046
Name : Satva Chandrao Mane
Father's Name: Chandrao Mane
House Number : 83
Age : 33 Gender : Male
Photo Available

489 SYF4374781
Name : Sachin Walegaonkar
Father's Name: Uttamrao Walegaonkar
House Number : 83
Age : 24 Gender : Male
Photo Available

490 SYF3841129
Name : Shridharrao Kishan Panchaal
Father's Name: Kishan Panchaal
House Number : 84
Age : 73 Gender : Male
Photo Available

491 SYF3841137
Name : Laxmi Bai Shridharrao Panchaal
Husband's Name: Shridharrao Panchaal
House Number : 84
Age : 68 Gender : Female
Photo Available

492 SYF1822394
Name : Premkala Maroti Panchaal
Husband's Name: Maroti Panchaal
House Number : 84
Age : 46 Gender : Female
Photo Available

493 SYF3589728
Name : Gajanan Datta Jalpate
Father's Name: Datta Jalpate
House Number : 85
Age : 30 Gender : Male
Photo Available

494 SYF3841145
Name : Ganpat Babu Tokalavad
Father's Name: Babu Tokalavad
House Number : 85
Age : 48 Gender : Male
Photo Available

495 BHW1491000
Name : Ganesh Dattarav Mirase
Father's Name: Dattarav Mirase
House Number : 86
Age : 46 Gender : Male
Photo Available

496 BHW1490945
Name : Ranjana Ganesh Mirase
Husband's Name: Ganesh Mirase
House Number : 86
Age : 43 Gender : Female
Photo Available

497 BHW1496470
Name : Dattram Jalba Mirashe
Father's Name: Jalba Mirashe
House Number : 86
Age : 68 Gender : Male
Photo Available

498 BHW1496488
Name : Gangabai Dattram Mirashe
Husband's Name: Dattram Mirashe
House Number : 86
Age : 63 Gender : Female
Photo Available

499 BHW1491034
Name : Sadashiv Dattram Mirashe
Father's Name: Dattram Mirashe
House Number : 86
Age : 44 Gender : Male
Photo Available

500 BHW1490994
Name : Vandana Sadashiv Mirashe
Husband's Name: Sadashiv Mirashe
House Number : 86
Age : 43 Gender : Female
Photo Available

501 SYF1571736
Name : Nagorav Narayan Mirashe
Father's Name: Narayan Mirashe
House Number : 87
Age : 56 Gender : Male
Photo Available

502 SYF3841160
Name : Rukhamabai Nagorav Mirashe
Husband's Name: Nagorav Mirashe
House Number : 87
Age : 53 Gender : Female
Photo Available

503 SYF3086832
Name : Bhaurao Ganpati Mirashe
Father's Name: Ganpati Mirashe
House Number : 87
Age : 43 Gender : Male
Photo Available

504 SYF1822352
Name : Laxman Ganpat Mirashe
Father's Name: Laxman Ganpat Mirashe
House Number : 87
Age : 38 Gender : Male
Photo Available

505 SYF1822360
Name : Manisha Bhaurav Mirashe
Husband's Name: Bhaurav Mirashe
House Number : 87
Age : 37 Gender : Female
Photo Available

506 SYF1822345
Name : Manjula Laxman Mirashe
Husband's Name: Laxman Mirashe
House Number : 87
Age : 36 Gender : Female
Photo Available

507 SYF2939056
Name : Vikas Nagorao Mirashe
Father's Name: Nagorao Mirashe
House Number : 87
Age : 34 Gender : Male
Photo Available

508 SYF2939049
Name : Baban Nagorao Mirashe
Father's Name: Nagorao Mirashe
House Number : 87
Age : 33 Gender : Male
Photo Available

509 SYF3793221
Name : Warsha Mirashe
Husband's Name: Vikas Mirashe
House Number : 87
Age : 32 Gender : Female
Photo Available

510 SYF3394335
Name : Kusum Baban Mirashe
Husband's Name: Baban Mirashe
House Number : 87
Age : 30 Gender : Female
Photo Available

511 SYF4374617
Name : Suraj Devidas Pawale
Father's Name: Devidas Pawale
House Number : 88
Age : 25 Gender : Male
Photo Available

512 BHW1259241
Name : Maroti Mahadu Mirashe
Father's Name: Mahadu Mirashe
House Number : 88
Age : 58 Gender : Male
Photo Available

513 SYF3841178
Name : Prabhavati Maroti Mirashe
Husband's Name: Maroti Mirashe
House Number : 88
Age : 53 Gender : Female
Photo Available

514 SYF3841186
Name : Godavaribai Tukaram Mirashe
Husband's Name: Tukaram Mirashe
House Number : 88
Age : 50 Gender : Female
Photo Available

515 SYF3841202
Name : Pandurang Sakharam Khadke
Father's Name: Sakharam Khadke
House Number : 89
Age : 58 Gender : Male
Photo Available

516 SYF3841236
Name : Shivaji Sakharam Khadke
Father's Name: Sakharam Khadke
House Number : 89
Age : 53 Gender : Male
Photo Available

517 SYF3841210
Name : Dropadabai Pandurang Khadke
Husband's Name: Pandurang Khadke
House Number : 89
Age : 53 Gender : Female
Photo Available

518 BHW1477306
Name : Shardabai Shivaji Khadke
Husband's Name: Shivaji Khadke
House Number : 89
Age : 48 Gender : Female
Photo Available

519 SYF1521566
Name : Gopal Pandurang Khadke
Father's Name: Pandurang Khadke
House Number : 89
Age : 36 Gender : Male
Photo Available

520 SYF4374492
Name : Subham Khadke
Father's Name: Shivaji Khadke
House Number : 89
Age : 24 Gender : Male
Photo Available

521 SYF3589694
Name : Vidyabai Laxman Pinnalwar
Husband's Name: Laxman Pinnalwar
House Number : 89
Age : 44 Gender : Female
Photo Available

522 SYF3589710
Name : Krushna Laxmanrao Pinnalwar
Father's Name: Laxmanrao Pinnalwar
House Number : 89
Age : 28 Gender : Male
Photo Available

523 BHW1479005
Name : Bramhajee Champati Mirase
Father's Name: Champati Mirase
House Number : 90
Age : 49 Gender : Male
Photo Available

524 SYF3086824
Name : Ramdas Champati Mirase
Father's Name: Champati Mirase
House Number : 90
Age : 46 Gender : Male
Photo Available

525 SYF3841244
Name : Champati Chandrao Mirashe
Father's Name: Chandrao Mirashe
House Number : 90
Age : 73 Gender : Male
Photo Available

526 SYF3841251
Name : Laxmi Bai Champati Mirashe
Husband's Name: Champati Mirashe
House Number : 90
Age : 68 Gender : Female
Photo Available

527 SYF3841277
Name : Kishan Champati Mirashe
Father's Name: Champati Mirashe
House Number : 90
Age : 46 Gender : Male
Photo Available

528 BHW1477082
Name : Sagar Kishan Mirashe
Husband's Name: Kishan Mirashe
House Number : 90
Age : 42 Gender : Female
Photo Available

529 SYF1822378
Name : Jeeja Bramhajee Mirashe
Husband's Name: Bramhajee Mirashe
House Number : 90
Age : 37 Gender : Female
Photo Available

530 SYF3247137
Name : Anita Ramdas Mirashe
Husband's Name: Ramdas Mirashe
House Number : 90
Age : 34 Gender : Female
Photo Available

531 SYF3625910
Name : Dnyaeshwar Kishan Mirashe
Father's Name: Kishan Mirashe
House Number : 90
Age : 29 Gender : Male
Photo Available

532 SYF3841285
Name : Gangabai Vitthal Dukare
Father's Name: Vitthal Dukare
House Number : 91
Age : 73 Gender : Female
Photo Available

533 SYF3841293
Name : Baburao Vitththal Rao Dukare
Father's Name: Vitththal Rao Dukare
House Number : 91
Age : 46 Gender : Male
Photo Available

534 BHW1475300
Name : Kodabai Baburao Dukare
Husband's Name: Baburao Dukare
House Number : 91
Age : 45 Gender : Female
Photo Available

535 BHW1477140
Name : Surekha Devrao Mirashe
Husband's Name: Devrao Mirase
House Number : 92
Age : 44 Gender : Female
Photo Available

536 SYF3841301
Name : Ganpati Jalba Mirashe
Father's Name: Jalba Mirashe
House Number : 92
Age : 78 Gender : Male
Photo Available

537 BHW1478171
Name : Devrao Ganpati Mirashe
Father's Name: Ganpati Mirashe
House Number : 92
Age : 48 Gender : Male
Photo Available

538 SYF4528824
Name : Pandurang Devrao Mirashe
Father's Name: Devrao Mirashe
House Number : 92
Age : 23 Gender : Male
Photo Available

539 SYF3841327
Name : Sudam Jalba Mirashe
Father's Name: Jalba Mirashe
House Number : 93
Age : 55 Gender : Male
Photo Available

540 SYF3841335
Name : Neelabai Sudam Mirashe
Husband's Name: Sudam Mirashe
House Number : 93
Age : 53 Gender : Female
Photo Available

541 SYF3246881
Name : Janardhan Amruta Mirashe
Father's Name: Amruta Mirashe
House Number : 93
Age : 42 Gender : Male
Photo Available

542 SYF3086840
Name : mirshe Subhash Narayan Narayan Meerashe Meerashe
Father's Name: Narayan Meerashe Meerashe
House Number : 95
Age : 44 Gender : Male
Photo Available

543 SYF3841269
Name : Limbaji Chandrao Mirashe
Father's Name: Chandrao Mirashe
House Number : 95
Age : 68 Gender : Male
Photo Available

544 SYF3841343
Name : Rukhamabai Limbaji Mirashe
Husband's Name: Limbaji Mirashe
House Number : 95
Age : 63 Gender : Female
Photo Available

545 BHW1478536
Name : Girjabai Parmeshwar Mirashe
Husband's Name: Parmeshwar Mirashe
House Number : 95
Age : 46 Gender : Female
Photo Available

546 SYF3394293
Name : Anjana Baban Mirashe
Husband's Name: Baban Mirashe
House Number : 95
Age : 39 Gender : Female
Photo Available

547 SYF3394343
Name : Narayan Parmeshwar Mirashe
Father's Name: Parmeshwar Mirashe
House Number : 95
Age : 31 Gender : Male
Photo Available

548 SYF3841368
Name : Laxmi Bai Narayan Mane
Husband's Name: Narayan Mane
House Number : 97
Age : 68 Gender : Female
Photo Available

549 SYF3841376
Name : Narayan Tukaram Mane
Father's Name: Tukaram Mane
House Number : 97
Age : 66 Gender : Male
Photo Available

550 BHW1475193
Name : Ganesh Narayan Mane
Father's Name: Narayan Mane
House Number : 97
Age : 47 Gender : Male
Photo Available

551 SYF3841426
Name : Vijay Shesherao Mane
Father's Name: Shesherao Mane
House Number : 98
Age : 57 Gender : Male
Photo Available

552 SYF3841392
Name : Kamlabai Rajabhau Pimparavar
Husband's Name: Rajabhau Pimparavar
House Number : 98
Age : 78 Gender : Female
Photo Available

553 SYF3086865
Name : Ashok Rajabhau Pimparavar
Father's Name: Rajabhau Pimparavar
House Number : 98
Age : 54 Gender : Male
Photo Available

554 SYF3841400
Name : Balaji Rajabhau Pimparavar
Father's Name: Rajabhau Piparavar
House Number : 98
Age : 51 Gender : Male
Photo Available

555 BHW1478239
Name : Ratnamala Balaji Pimparavar
Husband's Name: Balaji Pimparavar
House Number : 98
Age : 44 Gender : Female
Photo Available

556 SYF4543062
Name : Ritesh Balaji Pimpawar
Father's Name: Balaji Rajabhau Pimparwar
House Number : 98
Age : 22 Gender : Male
Photo Available

557 SYF3296498
Name : Satish Tajabhau Pinparwar
Father's Name: Tajabhau Pinparwar
House Number : 98
Age : 64 Gender : Male
Photo Available

558 SYF3841418
Name : Shobhabai Satish Piparavar
Husband's Name: Satish Piparavar
House Number : 98
Age : 53 Gender : Female
Photo Available

559 SYF4374666
Name : Dhirajkumar Ghumanar
Father's Name: Dhondiba Ghumanar
House Number : 100
Age : 25 Gender : Male
Photo Available

560 SYF3841475
Name : Digambar Dattarav Mane
Father's Name: Dattarav Mane
House Number : 100
Age : 63 Gender : Male
Photo Available

561 SYF3841459
Name : Rekhabai Sheshrao Mane
Husband's Name: Sheshrao Mane
House Number : 100
Age : 63 Gender : Female
Photo Available

562 SYF3841491
Name : Sumanbai Digambar Mane
Husband's Name: Digambar Mane
House Number : 100
Age : 58 Gender : Female
Photo Available

563 SYF3841483
Name : Subhash Dattarav Mane
Father's Name: Dattarav Mane
House Number : 100
Age : 53 Gender : Male
Photo Available

564 BHW1476720
Name : Santosh Dattarav Mane
Father's Name: Dattarav Mane
House Number : 100
Age : 48 Gender : Male
Photo Available

565 BHW1476936
Name : Gajanan Sheshrao Mane
Father's Name: Sheshrao Mane
House Number : 100
Age : 45 Gender : Male
Photo Available

566 BHW1491836
Name : Anita Santosh Mane
Husband's Name: Santosh Mane
House Number : 100
Age : 43 Gender : Female
Photo Available

567 BHW1475128
Name : Vikas Di Gambar Mane
Father's Name: Di Gambar Mane
House Number : 100
Age : 41 Gender : Male
Photo Available

568 BHW1475870
Name : Kailash Shesher Av Mane
Father's Name: Sheshar Av Mane
House Number : 100
Age : 41 Gender : Male
Photo Available

569 SYF1521574
Name : Pushpatai Gajanan Mane
Husband's Name: Gajanan Mane
House Number : 100
Age : 40 Gender : Female
Photo Available

570 SYF2939064
Name : Dnyaneshwar Digambar Mane
Father's Name: Digambar Mane
House Number : 100
Age : 32 Gender : Male
Photo Available

571 SYF2939494
Name : Madhav Subhash Mane
Father's Name: Subhash Mane
House Number : 100
Age : 30 Gender : Male
Photo Available

572 SYF3841509
Name : Narayan Sambhaji Valeganvakar
Father's Name: Sambhaji Valeganvakar
House Number : 101
Age : 63 Gender : Male
Photo Available

573 SYF3841517
Name : Prayagbai Narayan Valeganvakar
Husband's Name: Narayan Valeganvakar
House Number : 101
Age : 58 Gender : Female
Photo Available

574 BHW1491802
Name : Godavari Babu Valegavakar
Husband's Name: Babu Valegavakar
House Number : 101
Age : 44 Gender : Female
Photo Available

575 SYF4404430
Name : Sunita Walegaonkar
Husband's Name: Ramesh Walegaonkar
House Number : 101
Age : 34 Gender : Female
Photo Available

576 SYF3793254
Name : Ramesh Walegavkar
Father's Name: Sambhaji Walegavkar
House Number : 101
Age : 36 Gender : Male
Photo Available

577 SYF3841541
Name : Laxman Sambhaji Valeganvakar
Father's Name: Sambhaji Valeganvakar
House Number : 102
Age : 58 Gender : Male
Photo Available

578 SYF3841558
Name : Shobhabai Laxman Valeganvakar
Husband's Name: Laxman Valeganvakar
House Number : 102
Age : 53 Gender : Female
Photo Available

579 SYF3841566
Name : Balu Kondba Suroshe
Father's Name: Kondba Suroshe
House Number : 103
Age : 53 Gender : Male
Photo Available

580 SYF3841574
Name : Laxmi Bai Balu Suroshe
Husband's Name: Balu Suroshe
House Number : 103
Age : 48 Gender : Female
Photo Available

581 SYF3698297
Name : Manisha Madhav Suroshe
Husband's Name: Madhav Suroshe
House Number : 103
Age : 26 Gender : Female
Photo Available

582 SYF3841590
Name : Nagorav Yalappa Pawar
Father's Name: Yalappa Pawar
House Number : 104
Age : 68 Gender : Male
Photo Available

583 SYF3841608
Name : Laxmi Bai Nagorav Pawar
Husband's Name: Nagorav Pawar
House Number : 104
Age : 63 Gender : Female
Photo Available

584 BHW1475631
Name : Sumitra Sure S Pawar
Husband's Name: Sure S Pawar
House Number : 104
Age : 49 Gender : Female
Photo Available

585 SYF3697950
Name : Bandu Nagorao Pawar
Father's Name: Nagorao Pawar
House Number : 104
Age : 33 Gender : Male
Photo Available

586 SYF3793106
Name : Bhagvan Pawar
Father's Name: Suresh Pawar
House Number : 104
Age : 30 Gender : Male
Photo Available

587 SYF4526711
Name : Satvshila Bhagwan Pawar
Husband's Name: Bhagwan Pawar
House Number : 104
Age : 25 Gender : Female
Photo Available

588 SYF4519476
Name : Visvanth Govind Babhulakar
Father's Name: Govind Babhulakar
House Number : 105
Age : 30 Gender : Male
Photo Available

589 SYF3841632
Name : Gangabai Govind Babhulakar
Husband's Name: Govind Babhulakar
House Number : 105
Age : 58 Gender : Female
Photo Available

590 SYF3841657
Name : Tukaram Maroti Babhulakar
Father's Name: Maroti Babhulakar
House Number : 106
Age : 61 Gender : Male
Photo Available

591 SYF3841665
Name : Dhrupatabai Tukaram Babhulakar
Husband's Name: Tukaram Babhulakar
House Number : 106
Age : 58 Gender : Female
Photo Available

592 SYF3841673
Name : Sahebrao Maroti Babhulakar
Father's Name: Maroti Babhulakar
House Number : 107
Age : 68 Gender : Male
Photo Available

593 SYF3841681
Name : Laxmi Bai Sahebrao Babhulakar
Husband's Name: Sahebrao Babhulakar
House Number : 107
Age : 63 Gender : Female
Photo Available

594 SYF2939080
Name : Ahamad Chunumiya Shaikh
Father's Name: Chunumiya Shaikh
House Number : 10 8
Age : 60 Gender : Male
Photo Available

595 SYF1822444
Name : Se. Ahmed Se Qaleem
Father's Name: Ahmed Se Qaleem
House Number : 108
Age : 36 Gender : Male
Photo Available

596 SYF3841699
Name : Mohiuddin Chunumiyan Shaikh
Father's Name: Chunumiyan Shaikh
House Number : 108
Age : 63 Gender : Male
Photo Available

597 SYF3841707
Name : Jamalbi Mohiuddin Shaikh
Husband's Name: Mohiuddin Shaikh
House Number : 108
Age : 58 Gender : Female
Photo Available

598 SYF2939072
Name : Bismilabi Ahamad Shaikh
Husband's Name: Ahamad Shaikh
House Number : 108
Age : 55 Gender : Female
Photo Available

599 SYF1822451
Name : Shaikh Feroj Shaikh Mohadin
Father's Name: Mohadin Shaikh
House Number : 108
Age : 41 Gender : Male
Photo Available

600 SYF2939114
Name : Mahebub Ahemad Shaikh
Father's Name: Ahemad Shaikh
House Number : 108
Age : 31 Gender : Male
Photo Available

601 SYF1822469
Name : Se. Fareed Se Mohammad
Father's Name: Fareed Se Mohammad
House Number : 111
Age : 39 Gender : Male
Photo Available

602 SYF3841715
Name : Fareed Khajamiyan Shaikh
Father's Name: Khajamiyan Shaikh
House Number : 111
Age : 68 Gender : Male
Photo Available

603 SYF3843760
Name : Vajirbi Fareed Shaikh
Husband's Name: Fareed Shaikh
House Number : 111
Age : 63 Gender : Female
Photo Available

604 SYF3843810
Name : Shekhalal Khajamiyan Shaikh
Father's Name: Khajamiyan Shaikh
House Number : 111
Age : 63 Gender : Male
Photo Available

605 SYF2939122
Name : Yunus Lal Shaikh
Father's Name: Lal Shaikh
House Number : 111
Age : 30 Gender : Male
Photo Available

606 SYF2939148
Name : Ahamad Farid Shaikh
Father's Name: Farid Shaikh
House Number : 111
Age : 30 Gender : Male
Photo Available

607 SYF3625589
Name : Santosh Subhash Wanole
Father's Name: Subhash Wanole
House Number : 111
Age : 28 Gender : Male
Photo Available

608 SYF4537650
Name : Shahin Shaikh Yunus
Husband's Name: Shaikh Yunus
House Number : 111
Age : 28 Gender : Female
Photo Available

609 SYF3625605
Name : Mangal Piraji Kharode
Husband's Name: Piraji Kharode
House Number : 113
Age : 35 Gender : Female
Photo Available

610 SYF3625654
Name : Piraji Pandurang Kharode
Father's Name: Pandurang Kharode
House Number : 113
Age : 35 Gender : Male
Photo Available

611 SYF1822485
Name : Parvin Se. Ayub Se
Husband's Name: Se. Ayub Se
House Number : 113
Age : 34 Gender : Female
Photo Available

612 SYF1822493
Name : Se. Nijam Se. Hameed Se Nijam
Father's Name: Se Nijam
House Number : 113
Age : 46 Gender : Male
Photo Available

613 SYF3843778
Name : Rahim Khajamiyan Shaikh
Father's Name: Khajamiyan Shaikh
House Number : 113
Age : 70 Gender : Male
Photo Available

614 SYF1520766
Name : Hameed Khajamiyan Shaikh
Father's Name: Khajamiyan Shaikh
House Number : 113
Age : 68 Gender : Male
Photo Available

615 SYF3843794
Name : Mamalabi Rahim Shaikh
Husband's Name: Rahim Shaikh
House Number : 113
Age : 63 Gender : Female
Photo Available

616 SYF1822600
Name : Shauqat Shaikh Ghudusab Shaikh Chhotemiyan Shaikh
Father's Name: Shaikh Ghudusab Shaikh Chhotemiyan Shaikh
House Number : 113
Age : 36 Gender : Male
Photo Available

617 SYF1571827
Name : Yusuf Shaikh Rahim Shaikh
Father's Name: Shaikh Rahim Shaikh
House Number : 113
Age : 35 Gender : Male
Photo Available

618 SYF1571835
Name : Yaqub Shaikh Rahim Shaikh
Father's Name: Yaqub Shaikh Rahim Shaikh
House Number : 113
Age : 34 Gender : Male
Photo Available

619 SYF1571843
Name : Ayuf Shaikh Rahim Shaikh
Father's Name: Ayuf Shaikh Rahim Shaikh
House Number : 113
Age : 34 Gender : Male
Photo Available

620 SYF3790698
Name : Rukasanabi Shaikh
Husband's Name: Yakub Shaikh
House Number : 113
Age : 35 Gender : Female
Photo Available

621 SYF3790631
Name : Valli Shaikh
Father's Name: Rahim Shaikh
House Number : 113
Age : 34 Gender : Male
Photo Available

622 SYF3790664
Name : Parvinbi Shaikh
Husband's Name: Valli Shaikh
House Number : 113
Age : 31 Gender : Female
Photo Available

623 SYF3790672
Name : Ramjan Shaikh
Father's Name: Rahim Shaikh
House Number : 113
Age : 30 Gender : Male
Photo Available

624 SYF3790714
Name : Baba Shaikh
Father's Name: Rahim Shaikh
House Number : 113
Age : 26 Gender : Male
Photo Available

625 SYF4446050
Name : Kunal Mane
Father's Name: Ganesh Mane
House Number : 116
Age : 24 Gender : Male
Photo Available

626 SYF3843802
Name : SHEKH CHOTU SHEKH KHAJAMIYA
Father's Name: SHEKH KHAJAMIYA
House Number : 116
Age : 78 Gender : Male
Photo Available

627 SYF3843828
Name : SHEKH JAYBUNBI SHEKH CHHOTUMIYA
Husband's Name: SHEKH CHHOTUMIYA
House Number : 116
Age : 73 Gender : Female
Photo Available

628 BHW1496058
Name : Hamza Chhotumiya Shaikh
Father's Name: Chhotumiya Shaikh
House Number : 116
Age : 48 Gender : Male
Photo Available

629 BHW1496272
Name : Aminabi Chhotu Shaikh
Husband's Name: Chhotu Shaikh
House Number : 116
Age : 46 Gender : Female
Photo Available

630 SYF3843851
Name : Faqeer Gulab Shaikh
Father's Name: Gulab Shaikh
House Number : 117
Age : 55 Gender : Male
Photo Available

631 SYF3843869
Name : Sharifabi Faqir Shaikh
Husband's Name: Faqeer Shaikh
House Number : 117
Age : 53 Gender : Female
Photo Available

632 SYF3843877
Name : Ameer Gulab Shaikh
Father's Name: Gulab Shaikh
House Number : 117
Age : 53 Gender : Male
Photo Available

633 SYF3843893
Name : Shabbir Gulab Shaikh
Father's Name: Gulab Shaikh
House Number : 117
Age : 50 Gender : Male
Photo Available

634 SYF3843885
Name : Vahidabi Ameer Shaikh
Husband's Name: Ameer Shaikh
House Number : 117
Age : 48 Gender : Female
Photo Available

635 SYF3843901
Name : Shakilabi Shabbir Shaikh
Husband's Name: Shabbir Shaikh
House Number : 117
Age : 47 Gender : Female
Photo Available

636 SYF3843927
Name : Madhav Banajee Shinde
Father's Name: Banajee Shinde
House Number : 118
Age : 60 Gender : Male
Photo Available

637 SYF3843919
Name : Uttamrao Banajee Shinde
Father's Name: Banajee Shinde
House Number : 118
Age : 58 Gender : Male
Photo Available

638 SYF3843935
Name : Sakhubai Madhav Rao Shinde
Husband's Name: Madhav Rao Shinde
House Number : 118
Age : 55 Gender : Female
Photo Available

639 BHW1475649
Name : Sheshakala Nagor Av Shinde
Husband's Name: Nagor Av Shinde
House Number : 118
Age : 47 Gender : Female
Photo Available

640 BHW1475805
Name : Namdev Madhav Shinde
Father's Name: Madhav Shinde
House Number : 118
Age : 45 Gender : Male
Photo Available

641 SYF3793486
Name : Pandurang Shinde
Father's Name: Nagorao Shinde
House Number : 118
Age : 39 Gender : Male
Photo Available

642 SYF3296464
Name : Ashok Madhav Shinde
Father's Name: Madhav Shinde
House Number : 118
Age : 36 Gender : Male
Photo Available

643 SYF3793098
Name : Warsha Shinde
Husband's Name: Pandurang Shinde
House Number : 118
Age : 36 Gender : Female
Photo Available

644 SYF3698081
Name : Anita santosh Shinde
Husband's Name: santosh Shinde
House Number : 118
Age : 33 Gender : Female
Photo Available

645 SYF3296449
Name : Subhash madhav Shinde
Father's Name: madhav Shinde
House Number : 118
Age : 32 Gender : Male
Photo Available

646 SYF3698065
Name : Dhurpata Ashok Shinde
Husband's Name: Ashok Shinde
House Number : 118
Age : 28 Gender : Female
Photo Available

647 BHW1492123
Name : Vandana Shrikrushnavilas Vatamavar
Husband's Name: Shrikrushnavilas Vatamavar
House Number : 119
Age : 48 Gender : Female
Photo Available

648 SYF3843950
Name : Santosh Dattatreya Vatamavar
Father's Name: Dattatreya Vatamavar
House Number : 119
Age : 48 Gender : Male
Photo Available

649 BHW1492131
Name : Sanjana Santosh Vattamvar
Husband's Name: Santosh Vattamvar
House Number : 119
Age : 43 Gender : Female
Photo Available

650 SYF3697869
Name : Shrikrushnavilas Dattatray Wattamwar
Father's Name: Dattatray Wattamwar
House Number : 119
Age : 57 Gender : Male
Photo Available

651 SYF3843976
Name : Bhagwan Jalba Mane
Father's Name: Jalba Mane
House Number : 120
Age : 68 Gender : Male
Photo Available

652 SYF3843968
Name : Shivaji Bhagwan Mane
Father's Name: Bhagwan Mane
House Number : 120
Age : 48 Gender : Male
Photo Available

653 SYF1571744
Name : Kamalbai Shivaji Mane
Husband's Name: Shivaji Mane
House Number : 120
Age : 46 Gender : Female
Photo Available

654 SYF3697901
Name : Prashant Shivaji Mane
Father's Name: Shivaji Mane
House Number : 120
Age : 26 Gender : Male
Photo Available

655 SYF3843984
Name : Uttam Jalba Mane
Father's Name: Jalba Mane
House Number : 121
Age : 63 Gender : Male
Photo Available

656 SYF3843992
Name : Godavaribai Uttam Mane
Husband's Name: Uttam Mane
House Number : 121
Age : 58 Gender : Female
Photo Available

657 SYF3457926
Name : Santosh Digambar Dokhale
Father's Name: Digambar Dokhale
House Number : 122
Age : 44 Gender : Male
Photo Available

658 SYF3844016
Name : Bapoorao Kishan Mane
Father's Name: Kishan Mane
House Number : 122
Age : 48 Gender : Male
Photo Available

659 SYF3844024
Name : Kantabai Ganesh Mane
Husband's Name: Ganesh Mane
House Number : 122
Age : 48 Gender : Female
Photo Available

660 SYF3837333
Name : Sumitrabai Bapurao Mane
Husband's Name: Bapurao Mane
House Number : 122
Age : 46 Gender : Female
Photo Available

661 SYF2939171
Name : Abarao Ganesh Mane
Father's Name: Ganesh Mane
House Number : 122
Age : 31 Gender : Male
Photo Available

662 SYF2939189
Name : Pandurang Bapurao Mane
Father's Name: Bapurao Mane
House Number : 122
Age : 31 Gender : Male
Photo Available

663 SYF3793288
Name : Ramesh Mane
Father's Name: Bapurao Mane
House Number : 122
Age : 28 Gender : Male
Photo Available

664 SYF3793627
Name : Omkar Mane
Father's Name: Bapurao Mane
House Number : 122
Age : 27 Gender : Male
Photo Available

665 SYF3793593
Name : Jyoti Mane
Husband's Name: Abarao Mane
House Number : 122
Age : 26 Gender : Female
Photo Available

666 SYF3844057
Name : Vitththal Rao Maroti Mane
Father's Name: Maroti Mane
House Number : 123
Age : 53 Gender : Male
Photo Available

667 SYF3844065
Name : Rukhamabai Vitththal Rao Mane
Husband's Name: Vitththal Rao Mane
House Number : 123
Age : 48 Gender : Female
Photo Available

668 BHW1478452
Name : Sainath Vitthal Mane
Father's Name: Vitthal Mane
House Number : 123
Age : 44 Gender : Male
Photo Available

669 SYF2755817
Name : dattatray vitthal mane
Father's Name: vitthal mane
House Number : 123
Age : 36 Gender : Male
Photo Available

670 SYF3844073
Name : Prakash Tukaram Mane
Father's Name: Tukaram Mane
House Number : 124
Age : 58 Gender : Male
Photo Available

671 SYF1571751
Name : Sudhatai Prakash Mane
Husband's Name: Prakash Mane
House Number : 124
Age : 53 Gender : Female
Photo Available

672 BHW1475375
Name : Vitthal Prakash Mane
Father's Name: Prakash Mane
House Number : 124
Age : 46 Gender : Male
Photo Available

673 BHW1479294
Name : Sangeeta Viththe L Mane
Husband's Name: Viththe L Mane
House Number : 124
Age : 43 Gender : Female
Photo Available

674 SYF1571850
Name : Laxman Prakash Mane
Father's Name: Prakash Mane
House Number : 124
Age : 35 Gender : Male
Photo Available

675 SYF3844099
Name : SURYAKANT TUKARAM mane
Father's Name: Tukaram Mane
House Number : 125
Age : 67 Gender : Male
Photo Available

676 SYF3844107
Name : Mahananda Suryakant Mane
Husband's Name: Suryakant Mane
House Number : 125
Age : 48 Gender : Female
Photo Available

677 SYF2598332
Name : Mamta Suryakant Mane
Father's Name: Suryakant Mane
House Number : 125
Age : 33 Gender : Female
Photo Available

678 SYF4488243
Name : GAYATRI GAJANAN MANE
Husband's Name: GAGANAN MANE
House Number : 125
Age : 26 Gender : Female
Photo Available

679 SYF4488250
Name : AARTI TUKARAM MANE
Husband's Name: TUKARAM MANE
House Number : 125
Age : 26 Gender : Female
Photo Available

680 SYF4371464
Name : Sonali Mendhke
Husband's Name: Vishvanth Mendhke
House Number : 125
Age : 26 Gender : Female
Photo Available

681 SYF3844115
Name : Chandrakalabai Ram Rao Kadam
Husband's Name: Ram Rao Kadam
House Number : 126
Age : 63 Gender : Female
Photo Available

682 BHW1479401
Name : Kishor Ram Rao Kadam
Father's Name: Ram Rao Kadam
House Number : 126
Age : 46 Gender : Male
Photo Available

683 BHW1477355
Name : Arvind Ram Rao Kadam
Father's Name: Ram Rao Kadam
House Number : 126
Age : 45 Gender : Male
Photo Available

684 SYF1571777
Name : Panchkula Arvind Kadam
Husband's Name: Arvind Kadam
House Number : 126
Age : 37 Gender : Female
Photo Available

685 SYF3697851
Name : Gajanan Suryakant Mane
Father's Name: Suryakant Mane
House Number : 126
Age : 30 Gender : Male
Photo Available

686 SYF3844123
Name : Madhukar Gangadhar Padvale
Father's Name: Gangadhar Padvale
House Number : 127
Age : 68 Gender : Male
Photo Available

687 SYF3844131
Name : Vimalbai Madhukar Padvale
Husband's Name: Madhukar Padvale
House Number : 127
Age : 63 Gender : Female
Photo Available

688 BHW1496207
Name : Gangadhar Madhukarrav Padvale
Father's Name: Madhukarrav Padvale
House Number : 127
Age : 43 Gender : Male
Photo Available

689 SYF1822527
Name : Neelkanth Madhukar Padvale
Father's Name: Madhukar Padvale
House Number : 127
Age : 35 Gender : Male
Photo Available

690 SYF3844149
Name : Marot Rao Potanna Sudalavad
Father's Name: Potanna Sudalavad
House Number : 129
Age : 73 Gender : Male
Photo Available

691 SYF1822543
Name : Govind Maroti Sudalavad
Father's Name: Maroti Sudalavad
House Number : 129
Age : 41 Gender : Male
Photo Available

692 SYF2598357
Name : Pushpa Govind Rao Sudalavad
Husband's Name: Govind Rao Sudalavad
House Number : 129
Age : 41 Gender : Female
Photo Available

693 SYF2598340
Name : Gajanan Maroti Sudalavad
Father's Name: Maroti Sudalavad
House Number : 129
Age : 33 Gender : Male
Photo Available

694 SYF3791043
Name : Puja Sudalwad
Husband's Name: Gajanan Sudalwad
House Number : 129
Age : 28 Gender : Female
Photo Available

695 SYF3844164
Name : Padminabai Madhav Rao Alevar
Husband's Name: Madhav Rao Alevar
House Number : 130
Age : 73 Gender : Female
Photo Available

696 SYF3844180
Name : Parmeshwar Madhav Rao Alevar
Father's Name: Madhav Rao Alevar
House Number : 130
Age : 46 Gender : Male
Photo Available

697 BHW1477736
Name : Aruna Manohar Alevar
Husband's Name: Manohar Alevar
House Number : 130
Age : 45 Gender : Female
Photo Available

698 SYF3790623
Name : Archana Alewar
Husband's Name: Parmeshwar Alewar
House Number : 130
Age : 45 Gender : Female
Photo Available

699 SYF3793197
Name : Madhav Alewar
Father's Name: Manohar Alewar
House Number : 130
Age : 27 Gender : Male
Photo Available

700 SYF3844214
Name : Pandurang Davji Dudhade
Father's Name: Davji Dudhade
House Number : 133
Age : 53 Gender : Male
Photo Available

701 SYF1511278
Name : Sidram Davji Dudhade
Father's Name: Davji Dudhade
House Number : 133
Age : 49 Gender : Male
Photo Available

702 SYF3844222
Name : Lanlitabai Pandurang Dudhade
Husband's Name: Pandurang Dudhade
House Number : 133
Age : 49 Gender : Female
Photo Available

703 SYF1511260
Name : Yamuna Sidram Dudhade
Husband's Name: Sidram Dudhade
House Number : 133
Age : 44 Gender : Female
Photo Available

704 SYF4453791
Name : DEVIDAS DUDHADE
Father's Name: PANDURANG DUDHADE
House Number : 133
Age : 27 Gender : Male
Photo Available

705 SYF4398533
Name : AVINASH DUDHADE
Father's Name: PANDURANG DUDHADE
House Number : 133
Age : 25 Gender : Male
Photo Available

706 SYF3625928
Name : Nihal Raees Shaikh
Father's Name: Raees Shaikh
House Number : 133
Age : 27 Gender : Male
Photo Available

707 SYF3844255
Name : Rajabai Balaji Umare
Husband's Name: Balaji Umare
House Number : 135
Age : 47 Gender : Female
Photo Available

708 SYF3698313
Name : SUMIT SADASHIVRAO DESHMUKH
Father's Name: SADASHIVRAO DESHMUKH
House Number : H NO 135
Age : 26 Gender : Male
Photo Available

709 SYF3844263
Name : Laxmi Bai Balaji Mane
Husband's Name: Balaji Mane
House Number : 136
Age : 53 Gender : Female
Photo Available

710 SYF3844271
Name : Ranjanabai Ganesh Mane
Husband's Name: Ganesh Mane
House Number : 136
Age : 51 Gender : Female
Photo Available

711 SYF4537718
Name : Malubai Ashok Mane
Husband's Name: Ashok Mane
House Number : 136
Age : 43 Gender : Female
Photo Available

712 SYF3553013
Name : Sunil Balaji Mane
Father's Name: Balaji Mane
House Number : 136
Age : 42 Gender : Male
Photo Available

713 SYF2939288
Name : Meenabai Sunil Mane
Husband's Name: Sunil Mane
House Number : 136
Age : 34 Gender : Female
Photo Available

714 SYF3394301
Name : Mahananda Amol Mane
Husband's Name: Amol Mane
House Number : 136
Age : 31 Gender : Female
Photo Available

715 SYF3844297
Name : Rekhabai Ramesh Mane
Husband's Name: Ramesh Mane
House Number : 137
Age : 48 Gender : Female
Photo Available

716 SYF1520782
Name : Kalpana Anil Mane
Husband's Name: Anil Mane
House Number : 137
Age : 40 Gender : Female
Photo Available

717 SYF2939270
Name : Mina Gangadhar Padvale
Husband's Name: Gangadhar Padvale
House Number : 137
Age : 30 Gender : Female
Photo Available

718 SYF3589645
Name : Rahul Rajeshwar Pinnalwar
Father's Name: Rajeshwar Pinnalwar
House Number : 137
Age : 29 Gender : Male
Photo Available

719 SYF3844305
Name : Bhagyarathabai Tukaram Mane
Husband's Name: Tukaram Mane
House Number : 138
Age : 89 Gender : Female
Photo Available

720 SYF3844313
Name : UTTAM TUKARAM MANE
Father's Name: Tukaram Mane
House Number : 138
Age : 77 Gender : Male
Photo Available

721 BHW1491554
Name : Vimalbai Uttamrao Mane
Husband's Name: Uttamrao Mane
House Number : 138
Age : 63 Gender : Female
Photo Available

722 SYF3394244
Name : Shubham Uttamrao Mane
Father's Name: Uttamrao Mane
House Number : 138
Age : 29 Gender : Male
Photo Available

723 SYF3589678
Name : Sudarshan Uttamrao Mane
Father's Name: Uttamrao Mane
House Number : 138
Age : 28 Gender : Male
Photo Available

724 SYF4527883
Name : Pooja Sudarshan Mane
Husband's Name: Sudarshan Mane
House Number : 138
Age : 24 Gender : Female
Photo Available

725 SYF3296480
Name : Mane Ganesh Tukaram
Father's Name: Tukaram Mane
House Number : 138
Age : 79 Gender : Male
Photo Available

726 BHW1477645
Name : Vasant Rao Tukaram Mane
Father's Name: Tukaram Mane
House Number : 139
Age : 78 Gender : Male
Photo Available

727 BHW1496777
Name : Punjab Tukaram Mane
Father's Name: Tukaram Mane
House Number : 139
Age : 50 Gender : Male
Photo Available

728 BHW1477520
Name : Ranjanabai Vasant Rao Mane
Husband's Name: Vasant Rao Mane
House Number : 139
Age : 77 Gender : Female
Photo Available

729 BHW1477504
Name : Archana Ganeshrao Mane
Husband's Name: Ganeshrao Mane
House Number : 139
Age : 76 Gender : Female
Photo Available

730 BHW1478197
Name : Gangadhar Tukaram Mane
Father's Name: Tukaram Mane
House Number : 139
Age : 46 Gender : Male
Photo Available

731 BHW1477496
Name : Surekha Gangadhar Mane
Husband's Name: Gangadhar Mane
House Number : 139
Age : 45 Gender : Female
Photo Available

732 SYF2939205
Name : Gajanan Vasant Mane
Father's Name: Vasant Mane
House Number : 139
Age : 34 Gender : Male
Photo Available

733 SYF3844347
Name : Sanjay Datta Mane
Father's Name: Dattaramaji Mane
House Number : 141
Age : 51 Gender : Male
Photo Available

734 SYF3844354
Name : Ranjana Sanjay Mane
Husband's Name: Sanjay Mane
House Number : 141
Age : 47 Gender : Female
Photo Available

735 SYF3698008
Name : Pavansut Sanjay Mane
Father's Name: Sanjay Mane
House Number : 141
Age : 30 Gender : Male
Photo Available

736 SYF3697992
Name : Ramkishan Sanjay Mane
Father's Name: Sanjay Mane
House Number : 141
Age : 26 Gender : Male
Photo Available

737 SYF3837499
Name : Sudam Punjaji Khupse
Father's Name: Punjaji Khupse
House Number : 14 2
Age : 67 Gender : Male
Photo Available

738 SYF3844396
Name : Kishan Narayan Mane
Father's Name: Narayan Mane
House Number : 142
Age : 53 Gender : Male
Photo Available

739 SYF3844404
Name : Radha Bai Kishan Mane
Husband's Name: Kishan Mane
House Number : 142
Age : 48 Gender : Female
Photo Available

740 SYF3844412
Name : Yamunabai Kishan Mane
Husband's Name: Kishan Mane
House Number : 142
Age : 48 Gender : Female
Photo Available

741 BHW1478759
Name : Maroti Narayan Mane
Father's Name: Narayan Mane
House Number : 142
Age : 47 Gender : Male
Photo Available

742 BHW1496629
Name : Sangeeta Maroti Mane
Husband's Name: Maroti Mane
House Number : 142
Age : 44 Gender : Female
Photo Available

743 SYF2939437
Name : Santosh Sudam Khupase
Father's Name: Sudam Khupase
House Number : 14-2
Age : 34 Gender : Male
Photo Available

744 SYF3844438
Name : Pratibha Vijay Mane
Husband's Name: Vijay Mane
House Number : 143
Age : 53 Gender : Female
Photo Available

745 BHW1478221
Name : Sunitabai Balasaheb Mane
Husband's Name: Balasaheb Mane
House Number : 143
Age : 48 Gender : Female
Photo Available

746 SYF3798360
Name : Santosh Narayan Mane
Father's Name: Narayan Mane
House Number : 143
Age : 46 Gender : Male
Photo Available

747 SYF3086907
Name : Shudhamati Santosh Mane
Husband's Name: Santosh Mane
House Number : 143
Age : 43 Gender : Female
Photo Available

748 SYF1571868
Name : Shivaji Vijayrao Mane
Father's Name: Vijayrao Mane
House Number : 143
Age : 37 Gender : Male
Photo Available

749 SYF1520790
Name : Sanjay Sheshrao Pande
Father's Name: Sheshrao Pande
House Number : 144
Age : 36 Gender : Male
Photo Available

750 SYF1571876
Name : Seema Sanjay Pande
Husband's Name: Sanjay Pande
House Number : 144
Age : 35 Gender : Female
Photo Available

751 SYF3844453
Name : Rajershvar Devrao Deshmukh
Father's Name: Devrao Deshmukh
House Number : 145
Age : 63 Gender : Male
Photo Available

752 SYF3844461
Name : Sumanbai Rajershvar Deshmukh
Husband's Name: Rajershvar Deshmukh
House Number : 145
Age : 58 Gender : Female
Photo Available

753 BHW1490762
Name : Shobhabai Sadashivarao Deshmukh
Husband's Name: Sadashivarao Deshmukh
House Number : 145
Age : 50 Gender : Female
Photo Available

754 SYF1571793
Name : Satish Rajeshvarrao Deshmukh
Father's Name: Rajeshvarrao Deshmukh
House Number : 145
Age : 45 Gender : Male
Photo Available

755 BHW1477637
Name : Mangesh Rajeshvarrao Deshmukh
Father's Name: Rajeshvarrao Deshmukh
House Number : 145
Age : 43 Gender : Male
Photo Available

756 BHW1492347
Name : Umesh Rajeshwar Deshmukh
Father's Name: Rajeshwar Deshmukh
House Number : 145
Age : 40 Gender : Male
Photo Available

757 SYF2939213
Name : Vishranti Mangesh Deshmukh
Husband's Name: Mangesh Deshmukh
House Number : 145
Age : 31 Gender : Female
Photo Available

758 SYF1822550
Name : Sujata Satish Deshmukh
Husband's Name: Satish Deshmukh
House Number : 147
Age : 35 Gender : Female
Photo Available

759 SYF3844529
Name : Laxmi Bai Bapurao Jadhav
Husband's Name: Bapurao Jadhav
House Number : 148
Age : 56 Gender : Female
Photo Available

760 SYF3844537
Name : Deelip Shankarrao Jadhav
Father's Name: Shankarrao Jadhav
House Number : 148
Age : 52 Gender : Male
Photo Available

761 BHW1479070
Name : Chhayabai Dilip Jadhav
Husband's Name: Dilip Jadhav
House Number : 148
Age : 56 Gender : Female
Photo Available

762 BHW1479476
Name : Vandanabai Nandkishore Jadhav
Husband's Name: Nandkishore Jadhav
House Number : 148
Age : 48 Gender : Female
Photo Available

763 BHW1479096
Name : Anitabai Pratap Jadhav
Husband's Name: Pratap Jadhav
House Number : 148
Age : 47 Gender : Female
Photo Available

764 SYF3844545
Name : Nandkishore Shankar Rao Jadhav
Father's Name: Shankar Rao Jadhav
House Number : 148
Age : 46 Gender : Male
Photo Available

765 BHW1492263
Name : Shivaji Bapoorao Jadhav
Father's Name: Bapoorao Jadhav
House Number : 148
Age : 38 Gender : Male
Photo Available

766 SYF3698206
Name : Nikhil Nandkishor Jadhav
Father's Name: Nandkishor Jadhav
House Number : 148
Age : 26 Gender : Male
Photo Available

767 SYF1822592
Name : Renuka Dattatreya Pawar
Husband's Name: Dattatreya Pawar
House Number : 148
Age : 37 Gender : Female
Photo Available

768 BHW1476316
Name : Bhagwan Madhav Rao Ghumanar
Father's Name: Madhav Rao Ghumanar
House Number : 149
Age : 56 Gender : Male
Photo Available

769 SYF3844552
Name : Shobhabai Uttamrao Ghumanar
Husband's Name: Uttamrao Ghumanar
House Number : 149
Age : 53 Gender : Female
Photo Available

770 SYF3844560
Name : Pushpabai Bhagwan Ghumanar
Husband's Name: Bhagwan Ghumanar
House Number : 149
Age : 51 Gender : Female
Photo Available

771 BHW1475789
Name : Arunabai Nagorav Ghumanar
Husband's Name: Nagorav Ghumanar
House Number : 149
Age : 48 Gender : Female
Photo Available

772 SYF3844578
Name : Nagorav Madhav Rao Ghumanar
Father's Name: Madhav Rao Ghumanar
House Number : 149
Age : 46 Gender : Male
Photo Available

773 BHW1475888
Name : Avdhut Uttamrao Ghumanar
Father's Name: Uttamrao Ghumanar
House Number : 149
Age : 42 Gender : Male
Photo Available

774 SYF1822568
Name : Anuradha Avdhut Ghumanar
Husband's Name: Avdhut Ghumanar
House Number : 149
Age : 36 Gender : Female
Photo Available

775 SYF3844586
Name : Kalavatibai Tukaram Ghumanar
Husband's Name: Tukaram Ghumanar
House Number : 151
Age : 68 Gender : Female
Photo Available

776 SYF3844594
Name : Dhondiba Tukaram Ghumnar
Father's Name: Tukaram Ghumanar
House Number : 151
Age : 46 Gender : Male
Photo Available

777 BHW1475821
Name : Prabhavati Dhondiba Ghumnar
Husband's Name: Dhodamba Ghumanar
House Number : 151
Age : 42 Gender : Female
Photo Available

778 SYF3844602
Name : Gajrabai Rama Ghumanar
Husband's Name: Rama Ghumanar
House Number : 152
Age : 48 Gender : Female
Photo Available

779 SYF3844610
Name : Ashok Marot Rao Ghumanar
Father's Name: Marot Rao Ghumanar
House Number : 152
Age : 48 Gender : Male
Photo Available

780 BHW1496181
Name : Shilabai Ashok Ghumanar
Husband's Name: Ashok Ghumanar
House Number : 152
Age : 44 Gender : Female
Photo Available

781 SYF2939296
Name : Satish Ramrao Ghumnar
Father's Name: Ramrao Ghumnar
House Number : 152
Age : 32 Gender : Male
Photo Available

782 BHW1478122
Name : Dattatreya Punjaji Pawar
Father's Name: Punjaji Pawar
House Number : 153
Age : 44 Gender : Male
Photo Available

783 SYF3844636
Name : Vitthal Dattatreya Pinnalavar
Father's Name: Dattatreya Pinnalavar
House Number : 155
Age : 58 Gender : Male
Photo Available

784 SYF3844644
Name : Rukhamabai Vitthal Pinnalavar
Husband's Name: Vitthal Pinnalavar
House Number : 155
Age : 53 Gender : Female
Photo Available

785 SYF3844651
Name : Narayan Dattatreya Pinnalavar
Father's Name: Dattatreya Pinnalavar
House Number : 155
Age : 53 Gender : Male
Photo Available

786 SYF3844669
Name : Sunitabai Narayan Pinnalavar
Husband's Name: Narayan Pinnalavar
House Number : 155
Age : 48 Gender : Female
Photo Available

787 BHW1490952
Name : Shriniwas Vitthal Pinnalavar
Father's Name: Vitthal Pinnalavar
House Number : 155
Age : 42 Gender : Male
Photo Available

788 BHW1475425
Name : Satish Vitthal Pinnalavar
Father's Name: Vitthal Pinnalavar
House Number : 155
Age : 41 Gender : Male
Photo Available

789 SYF3698016
Name : Yogita Shrinivas Pinnalwar
Husband's Name: Shrinivas Pinnalwar
House Number : 155
Age : 35 Gender : Female
Photo Available

790 SYF3625290
Name : Lakshman Sahebrao Babhulkar
Father's Name: Sahebrao Babhulkar
House Number : 156
Age : 27 Gender : Male
Photo Available

791 SYF4508180
Name : Chandrakala Babulkar
Husband's Name: Laxman Babulkar
House Number : 156
Age : 37 Gender : Female
Photo Available

792 SYF3844685
Name : Bhagwan Hiraman Pinnalavar
Father's Name: Hiraman Pinnalavar
House Number : 156
Age : 53 Gender : Male
Photo Available

793 SYF3844693
Name : Parmeshwar Hiraman Pinnalavar
Father's Name: Hiraman Pinnalavar
House Number : 156
Age : 50 Gender : Male
Photo Available

794 SYF3844701
Name : Karunabai Bhagwan Pinnalavar
Husband's Name: Bhagwan Pinnalavar
House Number : 156
Age : 48 Gender : Female
Photo Available

795 SYF3844719
Name : Laxman Hiraman Pinnalavar
Father's Name: Hiraman Pinnalavar
House Number : 156
Age : 48 Gender : Male
Photo Available

796 SYF3844677
Name : Santosh Hiraman Pinnalavar
Father's Name: Hiraman Pinnalavar
House Number : 156
Age : 46 Gender : Male
Photo Available

797 SYF3086931
Name : Sandhyabai Santosh Pinnalavar
Husband's Name: Santosh Pinnalavar
House Number : 156
Age : 43 Gender : Female
Photo Available

798 SYF2939247
Name : Rajani Balaji Pinnalwar
Husband's Name: Balaji Pinnalwar
House Number : 156
Age : 47 Gender : Female
Photo Available

799 SYF2939254
Name : Asvini Swapnil Pinnalwar
Husband's Name: Swapnil Pinnalwar
House Number : 156
Age : 38 Gender : Female
Photo Available

800 SYF3697935
Name : Mangesh Parmeshwar Pinnalwar
Father's Name: Parmeshwar Pinnalwar
House Number : 156
Age : 29 Gender : Male
Photo Available

801 SYF3625357
Name : Chimanaji Sahebrao Babhulkar
Father's Name: Sahebrao Babhulkar
House Number : 158
Age : 33 Gender : Male
Photo Available

802 SYF3625316
Name : Ramesh Sahebrao Babhulkar
Father's Name: Sahebrao Babhulkar
House Number : 158
Age : 29 Gender : Male
Photo Available

803 SYF3698305
Name : Akash Premrao Thakare
Father's Name: Premrao Thakare
House Number : 161
Age : 27 Gender : Male
Photo Available

804 SYF3790771
Name : Prashant Jalpate
Father's Name: Madhavrao Jalpate
House Number : 171
Age : 28 Gender : Male
Photo Available

805 SYF3625795
Name : Azim Hamid Shaikh
Father's Name: Hamid Shkaikh
House Number : 184
Age : 30 Gender : Male
Photo Available

806 SYF3625456
Name : Nazim Hamid Shaikh
Father's Name: Hamid Shaikh
House Number : 184
Age : 28 Gender : Male
Photo Available

807 SYF3625514
Name : Vishal Ramrao Vachhevar
Father's Name: Ramrao Vachhewar
House Number : 184
Age : 27 Gender : Male
Photo Available

808 BHW1479450
Name : Shakuntal Bai Nagorav Sawant
Husband's Name: Nagorav Sawant
House Number : 19 1
Age : 68 Gender : Female
Photo Available

809 SYF3625548
Name : Zubair Mehraz Khan
Father's Name: Mehraz Khan
House Number : 195
Age : 28 Gender : Male
Photo Available

810 SYF3589652
Name : Parmeshwar Ganeshrao Mane
Father's Name: Ganeshrao Mane
House Number : 195
Age : 28 Gender : Male
Photo Available

811 SYF4518312
Name : SULEMANKHAN MUJAHIDKHAN PATHAN
Father's Name: MUJAHIDKHAN PATHAN
House Number : 195
Age : 24 Gender : Male
Photo Available

812 SYF4460739
Name : Tanzeela Saiphalikhan Pathan
Husband's Name: Saiphalikhan mujahidkhan Pathan
House Number : 195
Age : 23 Gender : Female
Photo Available

813 SYF3436649
Name : Salman Khan Pathan
Father's Name: Mujahid Khan Pathan
House Number : 196
Age : 29 Gender : Male
Photo Available

814 SYF3436623
Name : saiphalikhan mujahidkhan pathan pathan
Father's Name: Mujahid Khan Pathan
House Number : 196
Age : 30 Gender : Male
Photo Available

815 SYF3247004
Name : Nagesh Madhav Waghmare
Father's Name: Madhav Waghmare
House Number : 202
Age : 30 Gender : Male
Photo Available

816 SYF3625936
Name : Sunita Balaji Jhade
Husband's Name: Balaji Jhade
House Number : 214
Age : 34 Gender : Female
Photo Available

817 SYF3625381
Name : Laxmi Raju Zade
Husband's Name: Raju Zade
House Number : 214
Age : 31 Gender : Female
Photo Available

818 SYF3589637
Name : Gajanan Hari Jadhav
Father's Name: Hari Jadhav
House Number : 223
Age : 27 Gender : Male
Photo Available

819 SYF1521517
Name : Ratnamala Digambar Jadhav
Husband's Name: Digambar Jadhav
House Number : 228
Age : 36 Gender : Female
Photo Available

820 SYF3589629
Name : Shivaji Limbaji Mirashe
Father's Name: Limbaji Mirashe
House Number : 236
Age : 35 Gender : Male
Photo Available

821 SYF3589686
Name : Laxmibai Gajanana Dokhale
Husband's Name: Gajanana Dokhale
House Number : 238
Age : 29 Gender : Female
Photo Available

822 SYF3626017
Name : Renuka Shivaji Mirashe
Husband's Name: Shivaji Mirashe
House Number : 238
Age : 32 Gender : Female
Photo Available

823 SYF1520816
Name : Sandeep Keshav Rao Mane
Father's Name: Keshav Rao Mane
House Number : 240
Age : 37 Gender : Male
Photo Available

824 SYF3793635
Name : Mangal Sandip Mane
Husband's Name: Mangal Mane
House Number : 240
Age : 33 Gender : Female
Photo Available

825 SYF3787967
Name : KALYAN SAWANT
Father's Name: JAGANNATHRAO SAWANT
House Number : 241
Age : 27 Gender : Male
Photo Available

826 SYF4402988
Name : Karan mane
Father's Name: Babanrao Mane
House Number : 245
Age : 24 Gender : Male
Photo Available

827 SYF3625985
Name : Afrin Mohammad Shaikh
Husband's Name: Mohammad Shaikh
House Number : 277
Age : 28 Gender : Female
Photo Available

828 SYF3625738
Name : Sandip Khandu Dokhale
Father's Name: Khandu Dokhale
House Number : 278
Age : 27 Gender : Male
Photo Available

829 SYF3625886
Name : Asha Parmeshwar Gobade
Husband's Name: Parmeshwar Dokhale
House Number : 307
Age : 30 Gender : Female
Photo Available

830 SYF1572296
Name : Sunanda Ashokarav Jadhav
Husband's Name: Ashokarav Jadhav
House Number : 312
Age : 49 Gender : Female
Photo Available

831 SYF3796687
Name : Devrao Wanole
Father's Name: Tukaram Wanole
House Number : 321
Age : 33 Gender : Male
Photo Available

832 SYF3838968
Name : Godavaribai Sonba Pavle
Husband's Name: Sonba Pavle
House Number : 32 2
Age : 68 Gender : Female
Photo Available

833 SYF3838976
Name : Punjab Sonba Pavle
Father's Name: Sonba Pavle
House Number : 32 2
Age : 46 Gender : Male
Photo Available

834 BHW1490747
Name : Dilip Sonba Pavle
Father's Name: Sonba Pavle
House Number : 32 2
Age : 44 Gender : Male
Photo Available

835 SYF1521525
Name : Varsha Punjab Pavle
Husband's Name: Punjab Pavle
House Number : 32 2
Age : 43 Gender : Female
Photo Available

836 SYF3562501
Name : Ashvini Pandurang Dudhade
Father's Name: Pandurang Dudhade
House Number : 332
Age : 29 Gender : Female
Photo Available

837 SYF3562493
Name : Kartika Pandurang Dudhade
Father's Name: Pandurang Dudhade
House Number : 332
Age : 27 Gender : Female
Photo Available

838 SYF3562469
Name : Rajshri Maroti Dasarwad
Husband's Name: Maroti Dasarwad
House Number : 340
Age : 36 Gender : Female
Photo Available

839 SYF3562477
Name : Lalita Nagorao Dasarwad
Husband's Name: Nagorao Dasarwad
House Number : 341
Age : 35 Gender : Female
Photo Available

840 SYF0620480
Name : Radhabai Umaji Dokhale
Husband's Name: Umaji Dokhale
House Number : 36 1
Age : 56 Gender : Female
Photo Available

841 SYF3394210
Name : Parsram Umaji Dokhale
Father's Name: Umaji Dokhale
House Number : 36/1
Age : 39 Gender : Male
Photo Available

842 SYF2939502
Name : Mangalbai Baburao Dokhale
Husband's Name: Baburao Dokhale
House Number : 36-1
Age : 35 Gender : Female
Photo Available

843 SYF3839164
Name : Dagdu Basaji Dokhale
Father's Name: Basaji Dokhale
House Number : 37 1
Age : 61 Gender : Male
Photo Available

844 SYF3839172
Name : Leelabai Dagdu Dokhale
Husband's Name: Dagdu Dokhale
House Number : 37 1
Age : 58 Gender : Female
Photo Available

845 SYF3839198
Name : Ganesh Basaji Dokhale
Father's Name: Basaji Dokhale
House Number : 37 2
Age : 53 Gender : Male
Photo Available

846 SYF3839180
Name : Godavari Ganesh Dokhale
Husband's Name: Ganesh Dokhale
House Number : 37 2
Age : 48 Gender : Female
Photo Available

847 SYF3839206
Name : Shivaji Basaji Dokhale
Father's Name: Basaji Dokhale
House Number : 37 2
Age : 47 Gender : Male
Photo Available

848 BHW1476217
Name : Surekha Shivaji Dokhale
Husband's Name: Shivaji Dokhale
House Number : 37 2
Age : 45 Gender : Female
Photo Available

849 SYF3625753
Name : Ramesh Datta Gobade
Father's Name: Datta Gobade
House Number : 456
Age : 30 Gender : Male
Photo Available

850 SYF3625571
Name : Kashinath HIraman Gobade
Father's Name: HIraman Gobade
House Number : 457
Age : 31 Gender : Male
Photo Available

851 SYF3625951
Name : Vishvanath Hiraman Gobade
Father's Name: Hiraman obade
House Number : 457
Age : 26 Gender : Male
Photo Available

852 SYF3793213
Name : Maroti Gobade
Father's Name: Bhaurao Gobade
House Number : 50 - 1
Age : 30 Gender : Male
Photo Available

853 SYF3839412
Name : Bhaurao Bhujaji Gobade
Father's Name: Bhujaji Gobade
House Number : 50 1
Age : 53 Gender : Male
Photo Available

854 SYF3839420
Name : Godavaribai Bhauarao Gobade
Husband's Name: Bhauarao Gobade
House Number : 50 1
Age : 48 Gender : Female
Photo Available

855 SYF3839438
Name : Vimalbai Namdev Gobade
Husband's Name: Namdev Gobade
House Number : 50 2
Age : 58 Gender : Female
Photo Available

856 SYF1822188
Name : Sushila Madhav Gobade
Husband's Name: Madhav Gobade
House Number : 50 2
Age : 37 Gender : Female
Photo Available

857 SYF1520691
Name : Madhav Namdev Gobod
Father's Name: Namdev Gobod
House Number : 502
Age : 37 Gender : Male
Photo Available

858 SYF3625902
Name : Parmeshwar Namdev Gobade
Father's Name: Namdev Dokhale
House Number : 607
Age : 36 Gender : Male
Photo Available

859 SYF3839750
Name : Vitthal Dhondaba Gobade
Father's Name: Dhondaba Gobade
House Number : 65 1
Age : 53 Gender : Male
Photo Available

860 SYF3839768
Name : Mangalabai Vitthal Gobade
Husband's Name: Vitthal Gobade
House Number : 65 1
Age : 48 Gender : Female
Photo Available

861 SYF3394269
Name : Madhav Parsuram Wanole
Father's Name: Parsuram Wanole
House Number : 69-1
Age : 41 Gender : Male
Photo Available

862 SYF3394251
Name : Sheshikala Madhav Wanole
Husband's Name: Madhav Wanole
House Number : 69-1
Age : 38 Gender : Female
Photo Available

863 SYF3791019
Name : Ankush Mane
Father's Name: Chandrao Mane
House Number : 83 - 1
Age : 29 Gender : Male
Photo Available

864 SYF3841111
Name : Nilavati Chandrao Mane
Husband's Name: Chandrao Mane
House Number : 83 1
Age : 53 Gender : Female
Photo Available

865 SYF1561331
Name : Chandrao Kondba Mane
Father's Name: Kondba Mane
House Number : 83 1
Age : 50 Gender : Male
Photo Available

866 BHW1477389
Name : Ramji Jairam Panchaal
Father's Name: Jairam Panchaal
House Number : 84 1
Age : 68 Gender : Male
Photo Available

867 BHW1477108
Name : Shankutalabai Ramji Panchaal
Husband's Name: Ramji Panchaal
House Number : 84 1
Age : 63 Gender : Female
Photo Available

868 SYF4410056
Name : SONUTAI SHIVARAM PANCHAL
Husband's Name: SHIVRAM PANCHAL
House Number : 84/1
Age : 35 Gender : Female
Photo Available

869 SYF3247103
Name : Jayram Ramji Panchal
Father's Name: Ramji Panchal
House Number : 84-1
Age : 37 Gender : Male
Photo Available

870 SYF3625779
Name : Shivram Ramji Panchal
Father's Name: Ramji Panchal
House Number : 84-1
Age : 37 Gender : Male
Photo Available

871 SYF3625837
Name : Rekha Jayram Panchal
Husband's Name: Jayram Panchal
House Number : 84-1
Age : 28 Gender : Female
Photo Available

872 BHW1477348
Name : Kamal Pandit Mirase
Husband's Name: Pandit Mirase
House Number : 95 1
Age : 44 Gender : Female
Photo Available

873 SYF3841350
Name : Balaji Narayan Mirashe
Father's Name: Narayan Mirashe
House Number : 95 1
Age : 50 Gender : Male
Photo Available

874 BHW1476225
Name : Shobhabai Balaji Mirashe
Husband's Name: Balaji Mirashe
House Number : 95 1
Age : 46 Gender : Female
Photo Available

875 SYF3086857
Name : Meerashe Latabai Subhash Subhash Meerashe Meerashe
Husband's Name: Subhash Meerashe Meerashe
House Number : 95/1
Age : 43 Gender : Female
Photo Available

876 BHW1479369
Name : Janabai Anandrao Mane
Husband's Name: Anandrao Mane
House Number : 122 1
Age : 73 Gender : Female
Photo Available

877 SYF3086873
Name : Vanita Kishan rane
Husband's Name: Kishan rane
House Number : 122 1
Age : 49 Gender : Female
Photo Available

878 SYF3844156
Name : Aganath Balasaheb Sawant
Father's Name: Balasaheb Sawant
House Number : 129 1
Age : 63 Gender : Male
Photo Available

879 SYF3844248
Name : Godavaribai Chandrao Dudhade
Husband's Name: Chandrao Dudhade
House Number : 133 1
Age : 63 Gender : Female
Photo Available

880 SYF1822576
Name : Maroti Chandrao Dudhade
Father's Name: Chandrao Dudhade
House Number : 133 1
Age : 36 Gender : Male
Photo Available

881 SYF4529434
Name : Kamal Maroti Dudhade
Husband's Name: Maroti Dudhade
House Number : 133-1
Age : 33 Gender : Female
Photo Available

882 BHW1478213
Name : Vandana Aakash Mane
Husband's Name: Aakash Mane
House Number : 141 1
Age : 43 Gender : Female
Photo Available

883 SYF3844446
Name : Bhartibai Sheshrao Pande
Husband's Name: Sheshrao Pande
House Number : 144 1
Age : 53 Gender : Female
Photo Available

884 SYF1571884
Name : Anita Dilip Pangrikar
Husband's Name: Dilip Pande
House Number : 144/1
Age : 40 Gender : Female
Photo Available

885 SYF3844503
Name : Dr. Dada Rao Devrao Boragade
Father's Name: Devrao Boragade
House Number : 147 1
Age : 60 Gender : Male
Photo Available

886 SYF3844511
Name : Vanitabai Dada Rao Boragade
Husband's Name: Dada Rao Boragade
House Number : 147 1
Age : 53 Gender : Female
Photo Available

887 SYF3793114
Name : Abhishek Borgade
Father's Name: Dadarao Borgade
House Number : 147 -1
Age : 28 Gender : Male
Photo Available

888 SYF2939262
Name : Digambar Madhav Dhade
Father's Name: Madhav Dhade
House Number : 15 6-2
Age : 34 Gender : Male
Photo Available

889 SYF2939007
Name : Shantabai Mahadu Dhade
Husband's Name: Mahadu Dhade
House Number : 156-2
Age : 64 Gender : Female
Photo Available

890 SYF4543161
Name : Manisha Digambar Dhade
Husband's Name: Digambar Dhade
House Number : 156-2
Age : 33 Gender : Female
Photo Available

891 SYF1520808
Name : Vishwanath Punjaji Mendke
Father's Name: Punjaji Mendke
House Number : 219. /1
Age : 36 Gender : Male
Photo Available

892 SYF4302428
Name : SHOBHA NUKULWAD
Husband's Name: SAHEBRAO NUKULWAD
House Number : 307 10
Age : 40 Gender : Female
Photo Available

893 SYF4563771
Name : Sajedabegum Ramjan Shaikh
Husband's Name: Ramjan Rahiim Shaikh
House Number : 0
Age : 27 Gender : Female
Photo Available

894 SYF4563987
Name : Prathamesh Ganesh Mane
Father's Name: Ganesh Mane
House Number : 97
Age : 22 Gender : Male
Photo Available

895 SYF4566733
Name : Ajay Makode
Father's Name: Balaji Makode
House Number : 0
Age : 21 Gender : Male
Photo Available

896 SYF4569174
Name : Asmita Dhondiba Ghumnar
Father's Name: Dhondiba Ghumnar
House Number : 151
Age : 21 Gender : Female
Photo Available

897 SYF4571758
Name : SHWETA SHRIKRISHNAVILAS WATTAMWAR
Father's Name: SHRIKRISHNAVILAS WATTAMWAR
House Number : 0
Age : 22 Gender : Female
Photo Available

898 SYF4576823
Name : Dipak Santosh Mane
Father's Name: Santosh Mane
House Number : 100
Age : 21 Gender : Male
Photo Available

899 SYF4581948
Name : Dattatray Santosh Mane
Father's Name: Santosh Mane
House Number : 100
Age : 23 Gender : Male
Photo Available

900 SYF4582417
Name : Varsha Dhnodba Gobade
Husband's Name: Dhondba Gobade
House Number : 65
Age : 21 Gender : Female
Photo Available

901 SYF4586483
Name : Kavita Jalba Mirase
Others: Sudam Jalba Mirase
House Number : 93
Age : 37 Gender : Female
Photo Available

902 SYF4587846
Name : Balaji Dudhade
Father's Name: Sidram Dudhade
House Number : Pota (bu)
Age : 24 Gender : Male
Photo Available

903 SYF4591921
Name : SANDESH RATHOD
Father's Name: ROHIDAS RATHOD
House Number : 310
Age : 20 Gender : Male
Photo Available

904 SYF4592283
Name : Pushkar Gayke
Father's Name: Tukaram Gayke
House Number : 0
Age : 20 Gender : Male
Photo Available

905 SYF4597183
Name : Sandesh Mohan Waghmare
Father's Name: Mohan Waghmare
House Number : 0
Age : 24 Gender : Male
Photo Available

906 SYF4598611
Name : SANGITA DATTA DHOLE
Husband's Name: DATTA DHOLE
House Number : 0
Age : 33 Gender : Female
Photo Available

907 SYF4598801
Name : DATTA SATVA DHOLE
Father's Name: SATVA DHOLE
House Number : 0
Age : 35 Gender : Male
Photo Available

908 SYF4602033
Name : Supriya Vindal Ade
Father's Name: Vindal Ade
House Number : 0
Age : 21 Gender : Female
Photo Available

909 SYF4609749
Name : Aparna Vishal Pinnalvar
Husband's Name: Vishal Pinnalvar
House Number : 56
Age : 33 Gender : Female
Photo Available

910 SYF4612917
Name : Aditya Pandurang Makode
Father's Name: Pandurang Makode Makode
House Number : 18
Age : 21 Gender : Male
Photo Available

911 SYF4613410
Name : SHEKH SULEMAN SHEKH AJIS
Father's Name: SHEKH AJIS
House Number : 0
Age : 20 Gender : Male
Photo Available

912 SYF4620647
Name : Santosh Katamode
Father's Name: Parasram Katamode
House Number : 01
Age : 25 Gender : Male
Photo Available

913 SYF4638649
Name : Dattatray Santosh Wattamwar
Father's Name: Santosh Wattamwar
House Number : 0
Age : 21 Gender : Male
Photo Available

914 SYF4641775
Name : MADHUKAR VASANT JADHAV JADHAV
Father's Name: VASANT RAMJI JADHAV JADHAV
House Number : 74
Age : 24 Gender : Male
Photo Available

915 SYF4642708
Name : Vaibhavi Shivaji Walegaonkar
Husband's Name: shivaji Walegaonkar
House Number : 32
Age : 20 Gender : Female
Photo Available

916 SYF4658654
Name : Sanskar Balaji Pimparwar
Father's Name: Balaji Rajabhau Pimparwar
House Number : 98
Age : 20 Gender : Male
Photo Available

917 SYF4658670
Name : Laxmibai Chandrakant Jadhav
Husband's Name: Chandrakant Jadhav
House Number : 0
Age : 30 Gender : Female
Photo Available

918 SYF4658696
Name : Jijabai Raghunath Khupse
Husband's Name: Raghunath Maroti khupse
House Number : 23
Age : 42 Gender : Female
Photo Available

919 SYF4658878
Name : Pranav Dattatray Pawar
Father's Name: Dattatray Punjaji Pawar
House Number : 153
Age : 21 Gender : Male
Photo Available

920 SYF4659298
Name : Suryabhan Ganesh Mirashe
Mother's Name: Ranjana Ganesh Mirase mirase
House Number : 86
Age : 20 Gender : Male
Photo Available

921 SYF4659306
Name : Kedarnath Sadashiv Mirashe
Father's Name: Sadashiv Dattram Mirashe
House Number : 86
Age : 21 Gender : Male
Photo Available

922 SYF4659322
Name : Anusaya Ganesh Mirashe
Father's Name: Ganesh Dattaram Mirashe
House Number : 86
Age : 22 Gender : Female
Photo Available

923 SYF4665063
Name : Sarsptabai Ganpat Tokalwad
Husband's Name: Ganpat Babu Tokalwad
House Number : 85
Age : 36 Gender : Female
Photo Available

924 SYF4667358
Name : sameer rais shaikh shaikh
Father's Name: rais ahamad shaikh shaikh
House Number : 5
Age : 26 Gender : Male
Photo Available

925 SYF4668398
Name : Jayshri Satava Tokalwad
Husband's Name: Satva Ganpat Tokalwad
House Number : 85
Age : 23 Gender : Female
Photo Available

926 SYF4670576
Name : Rupali Vijay Alewar
Father's Name: Vijay Alewar Alewar
House Number : 130
Age : 27 Gender : Female
Photo Available

927 SYF4670626
Name : Shobha Vijay Aalewar
Others: Archana Parmeshwar Alewar
House Number : 130
Age : 49 Gender : Female
Photo Available

928 SYF4672408
Name : Pushpa Dilip Shinde
Husband's Name: Dilip Madhav Shinde
House Number : 01
Age : 25 Gender : Female
Photo Available

929 SYF4672473
Name : Shantabai Namdev Shinde
Husband's Name: Namdev Madhav Shinde
House Number : 118
Age : 40 Gender : Female
Photo Available

930 SYF4672499
Name : Sapna Namdev Shinde
Father's Name: Namdev Shinde
House Number : 01
Age : 25 Gender : Female
Photo Available

931 SYF4678884
Name : Rukhsana Nurullakhan Pathan
Husband's Name: Nurullakhan Pathan
House Number : 0
Age : 32 Gender : Female
Photo Available

932 SYF4685897
Name : Shilpa Kalu Jadhav
Husband's Name: Kalu Jadhav
House Number : 0
Age : 31 Gender : Female
Photo Available

933 SYF4691507
Name : Ramrao Maroti Ghumnar
Father's Name: Maroti Ghumnar
House Number : 152
Age : 60 Gender : Male
Photo Available

934 SYF4692265
Name : Mahananda Ramesh Gobade
Husband's Name: Ramesh Gobade
House Number : 0
Age : 22 Gender : Female
Photo Available

935 SYF4692554
Name : Vimalbai Marotrao Sudalwar
Husband's Name: Marotrao Sudalwad
House Number : 129
Age : 62 Gender : Female
Photo Available

936 SYF4707170
Name : HARSH PANJAB PAWALE
Father's Name: PANJAB PAWALE
House Number : 0
Age : 22 Gender : Male
Photo Available

937 SYF4713376
Name : Tanvi Parmeshwar Allewar
Father's Name: Parmeshwar Allewar
House Number : 130
Age : 20 Gender : Female
Photo Available

938 SYF4722674
Name : sunita chimnaji babhulkar
Husband's Name: chimnaji babhulkar
House Number : 002
Age : 23 Gender : Female
Photo Available

939 SYF4728861
Name : Kishan Govind Babhulkar
Mother's Name: Gangabai Babhulkar
House Number : 105
Age : 35 Gender : Male
Photo Available

940 SYF4730180
Name : Balu Shesherao Kharode
Father's Name: Shesherao Kharode
House Number : 72
Age : 22 Gender : Male
Photo Available

941 SYF4730453
Name : Rajeshri Kishan Babhulkar
Husband's Name: Kishan Babhulkar
House Number : 105
Age : 25 Gender : Female
Photo Available

942 SYF4732657
Name : Balaji Bapurao Gobade
Mother's Name: Padminbai Gobade
House Number : 50
Age : 32 Gender : Male
Photo Available

943 SYF4741922
Name : ANGURIBAI VASANT RATHOD
Father's Name: VASANT DEVRAO RATHOD
House Number : 0
Age : 23 Gender : Female
Photo Available

944 SYF4741971
Name : RESHMABAI ROHIDAS RATHOD
Husband's Name: ROHIDAS RAMESH RATHOD
House Number : 0
Age : 31 Gender : Female
Photo Available

945 SYF4751970
Name : Renuka Balaji Mirashe
Husband's Name: Balaji Mirashe
House Number : 0
Age : 33 Gender : Female
Photo Available

946 SYF4760047
Name : KOMAL HIRAMAN JALAPATE
Husband's Name: HIRAMAN JALAPATE
House Number : 00
Age : 20 Gender : Female
Photo Available

947 SYF4774121
Name : Asha Tukaram Dokhale
Husband's Name: Tukaram Dagadu Dokhale
House Number : 0
Age : 26 Gender : Female
Photo Available

948 SYF4777348
Name : MAYA MADHAV MANE
Husband's Name: MADHAV MANE
House Number : 100
Age : 26 Gender : Female
Photo Available

949 SYF4782975
Name : Amrapali Mohan Waghmare
Husband's Name: Mohan Ladbaji Waghmare
House Number : 23
Age : 28 Gender : Female
Photo Available

950 SYF4782959
Name : Umesh Mohan Waghmare
Father's Name: Mohan Ladbaji Waghmare
House Number : 23
Age : 21 Gender : Male
Photo Available

951 SYF4782868
Name : Gayatri Rajeshwar Mane
Mother's Name: Godavari Rajeshwar Mane
House Number : 259
Age : 20 Gender : Female
Photo Available

952 SYF4797841
Name : Payal Gajanan Jadhav
Husband's Name: Gajanan Hari Jadhav
House Number : 223
Age : 21 Gender : Female
Photo Available

953 SYF4798013
Name : RUBINA PATHAN
Husband's Name: SAIBASKHAN PATHAN
House Number : 0
Age : 23 Gender : Female
Photo Available

954 SYF4801247
Name : Shubham Prakash Mane
Father's Name: Prakash Mane
House Number : 138
Age : 26 Gender : Male
Photo Available

955 SYF4810891
Name : Balaji Gajanan Walegaokar
Father's Name: Gajanan Walegaokar
House Number : 0
Age : 20 Gender : Male
Photo Available

956 SYF4810933
Name : Santosh Pandurang jalpate
Father's Name: Pandurang Jalpate
House Number : 47
Age : 25 Gender : Male
Photo Available

957 SYF4814463
Name : SHAIKH AKRAM KALIM
Father's Name: SHAIKH KALIM
House Number : 0
Age : 20 Gender : Male
Photo Available

958 SYF4815791
Name : haseena latif shaikh
Husband's Name: latif shaikh
House Number : 113
Age : 24 Gender : Female
Photo Available

959 SYF4816773
Name : Bhau Sudhakar Rathod
Father's Name: Sudhakar Rathod
House Number : 0
Age : 20 Gender : Male
Photo Available

960 SYF4821088
Name : Nikita Parmeshwar Mane
Husband's Name: Parmeshwar Mane
House Number : 195
Age : 23 Gender : Female
Photo Available

961 SYF4821427
Name : anuradha baban jalapate
Husband's Name: baban jalapate
House Number : 184
Age : 34 Gender : Female
Photo Available

962 SYF4822037
Name : SAVITRA KASHINATH GOBADE
Husband's Name: KASHINATH GOBADE
House Number : 101
Age : 21 Gender : Female
Photo Available

963 SYF4823522
Name : Sandhya Vyankti Manmawad
Father's Name: Vyankti Manmawad
House Number : 15
Age : 24 Gender : Female
Photo Available

964 SYF4824074
Name : Rupali Santosh Wanole
Husband's Name: Santosh Wanole
House Number : 111
Age : 21 Gender : Female
Photo Available

965 BHW1491026
Name : Sajid Gulab Shaikh
Father's Name: Gulab Shaikh
House Number : 5
Age : 41 Gender : Male
Photo Available

966 SYF4827416
Name : Sachin Akash Mane
Father's Name: Akash Mane
House Number : 141-1
Age : 23 Gender : Male
Photo Available

967 SYF4831624
Name : Sumayabi Shaikh Mahebub
Husband's Name: Mahebub Shaikh
House Number : 108
Age : 25 Gender : Female
Photo Available

968 SYF4831509
Name : Savita Vishal Vachhevar
Husband's Name: Vishal Vachhevar
House Number : 184
Age : 22 Gender : Female
Photo Available

969 SYF4832846
Name : Anjana Rajendra Dudhade
Husband's Name: Rajendra Dudhade
House Number : 135
Age : 20 Gender : Female
Photo Available

970 SYF4836235
Name : Afarin Asad Shaikh
Husband's Name: Asad Shaikh
House Number : 190
Age : 26 Gender : Female
Photo Available

971 SYF4836227
Name : Sumayya Kausar Arshad Shaikh
Husband's Name: Arshad Shaikh
House Number : 190
Age : 27 Gender : Female
Photo Available

972 SYF4838280
Name : SHITAL SANDIP DOKHALE
Husband's Name: SANDIP DOKHALE
House Number : 278
Age : 21 Gender : Female
Photo Available

973 SYF4839718
Name : SAVITA SANTOSH MENDHEVAAR
Husband's Name: SANTOSH MENDHEVAAR
House Number : 61
Age : 40 Gender : Female
Photo Available

974 SYF4839759
Name : KAVITA SUBHASH SHINDE
Husband's Name: SUBHASH SHINDE
House Number : 118
Age : 24 Gender : Female
Photo Available

975 SYF4840724
Name : SANGITA GANESH BABHULKAR
Husband's Name: GANESH BABHULKAR
House Number : 66
Age : 36 Gender : Female
Photo Available

976 SYF4841649
Name : ASHWINI GOPAL KHADKE
Husband's Name: GOPAL KHADKE
House Number : 89
Age : 28 Gender : Female
Photo Available

977 SYF4841466
Name : Asad Ahemad Shaikh
Father's Name: Ahemad shaikh
House Number : 00
Age : 29 Gender : Male
Photo Available

SUMMARY OF ELECTORS

A) NUMBER OF ELECTORS

		Roll Type	Roll Identification	NUMBER OF ELECTORS			
				Male	Female	Third Gender	Total
I	Original	Mother Roll	Draft Electoral Roll prepared under Special Intensive Revision - 2026	505	471	1	977
				505	471	1	977

Issued by Electoral Registration Office